## VRL-070 – 1-Stage Dimensions

Input shaft bore ≦φ8

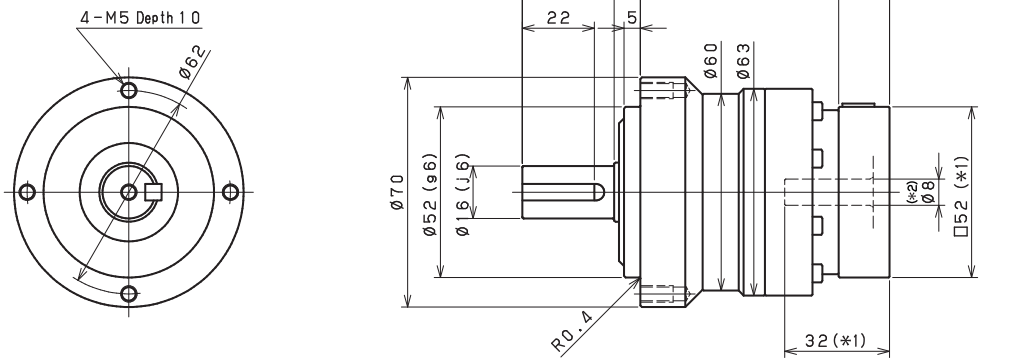


Input shaft bore ≦φ14

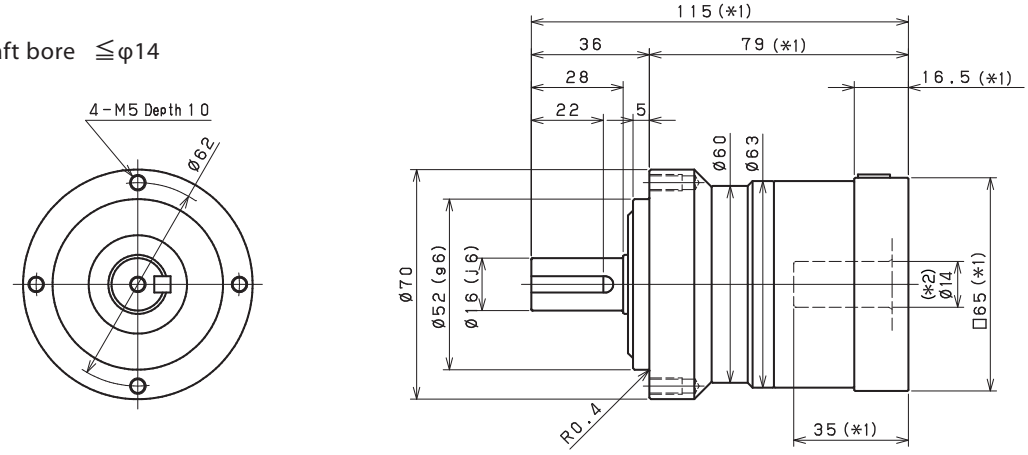


Input shaft bore ≦φ19

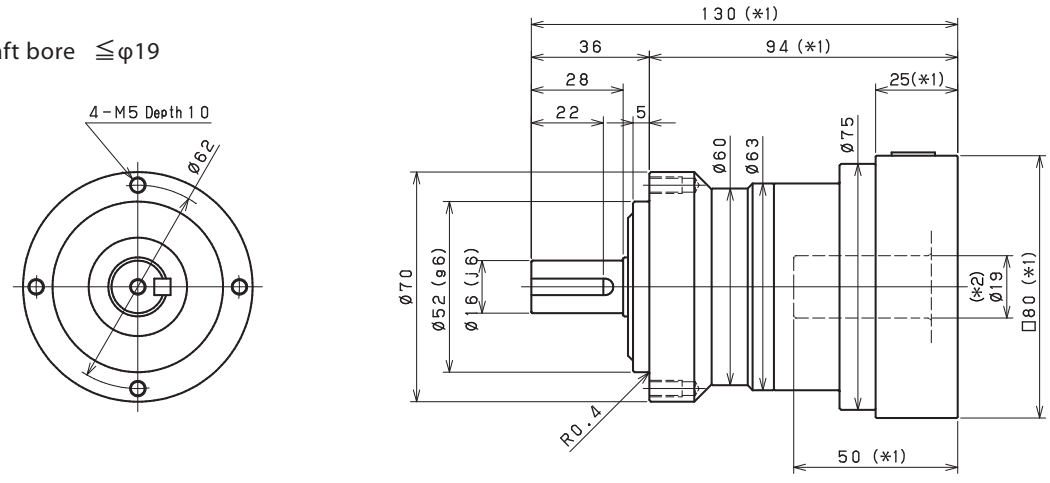


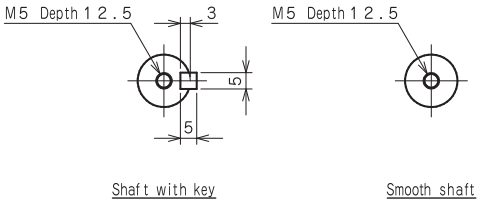


Shaft with key　　Smooth shaft

*1) Length will vary depending on motor

*2) Bushing will be inserted to adapt to motor shaft

## VRL-070 – 2-Stage Dimensions

Input shaft bore ≦φ8

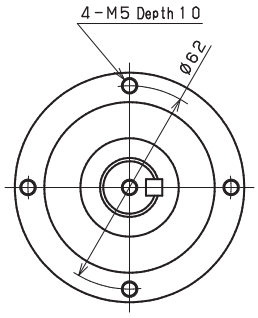


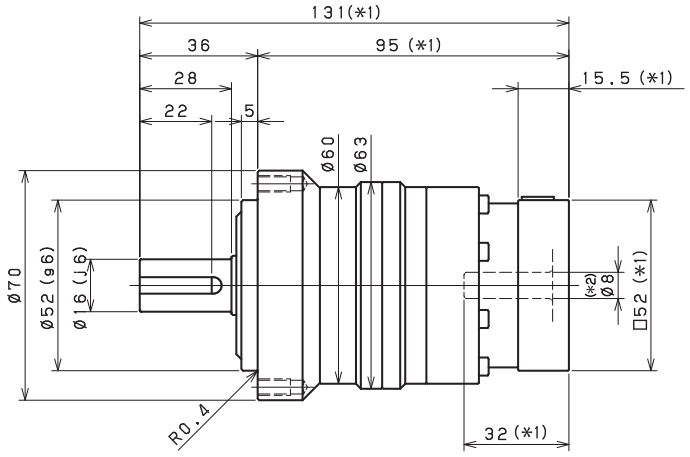


Input shaft bore ≦φ14

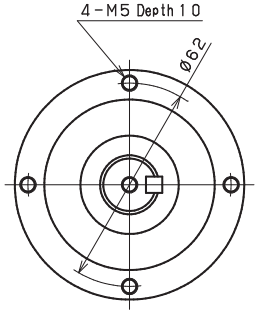


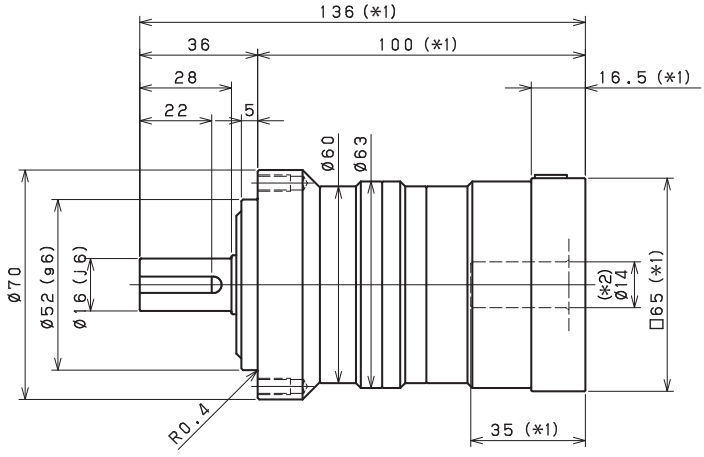


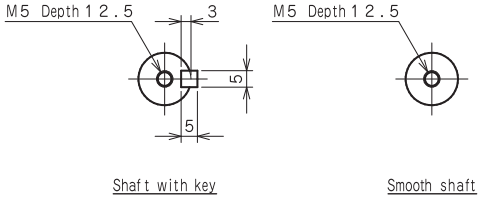


Shaft with key　　Smooth shaft

*1) Length will vary depending on motor

*2) Bushing will be inserted to adapt to motor shaft