Nidec

RXC Traction Drives

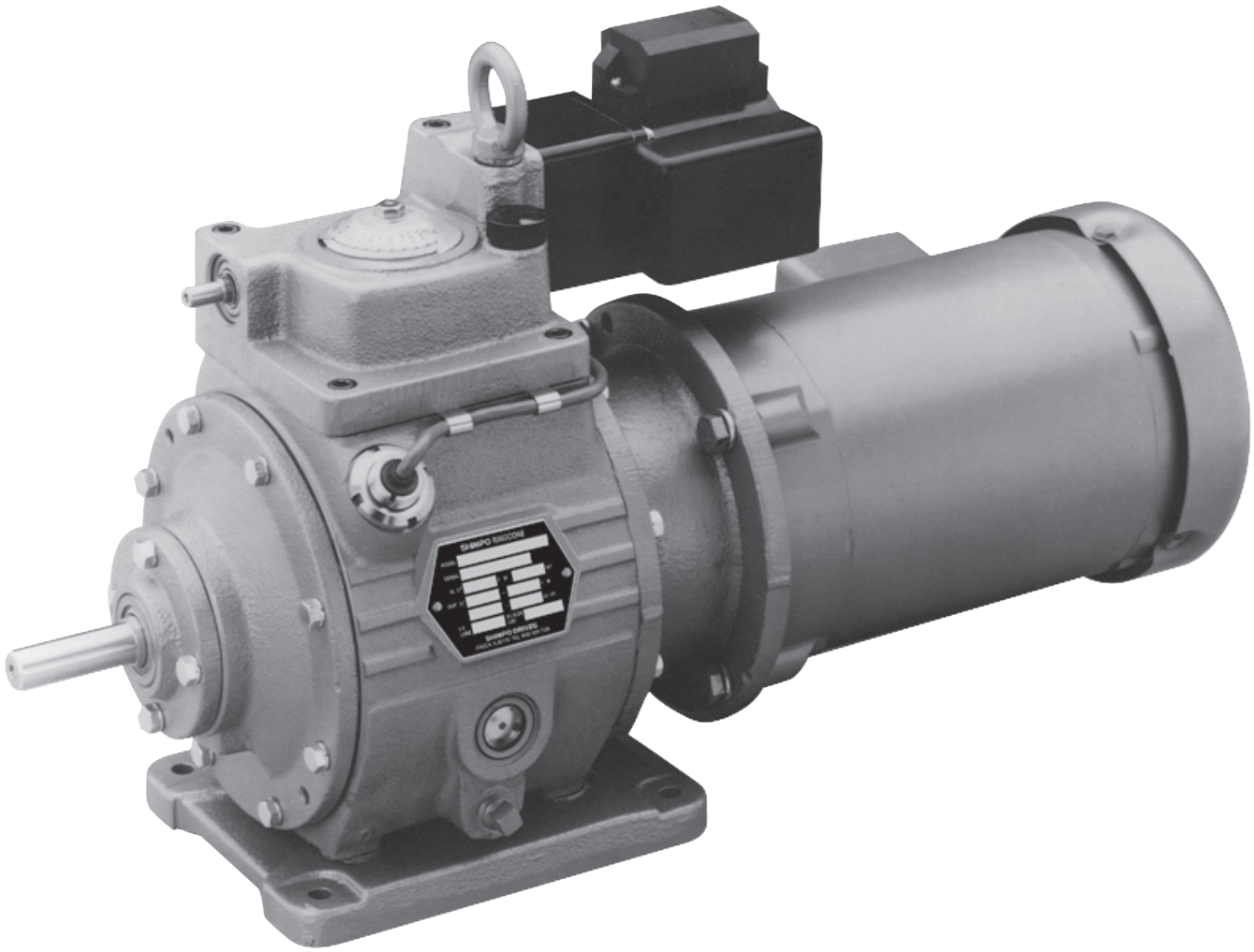

Instruction Manual

Sizes 02 - 95, (2X - 8X)

Model Number Chart

NMA	1	0	B	1	0	3	1	A	A	A	0	3	0
Input Code	Size Code		Reducer Code		Mounting Code	Speed Control Code		Main Motor	Motor Specification		Factory Use	Speed Adjust-ment	Environ-mental
A	B		C		D	E		F	G		H	I	J

Input Code Ordering Code	A
RMA	1X C-Face Input
RXA	1X Shaft-In
NMC	2X C-Face Input
NXC	2X Shaft-In
NMA	3X-7X C-Face Input
NXA	3X-7X Shaft-In

Size Code Ordering Code	B
90	1X, 0.125HP
02	2X, 0.25HP
04	2X, 0.5HP
05	3X, 0.75HP
07	3X, 1HP
10	4X, 1.5HP
15	4X, 2HP
22	5X, 3HP
37	6X, 5HP
55	7X, 7.5HP
75	7.5X, 10HP
91	8X, 15HP
95	8X, 20HP

Reducer Code Ordering Code	C
00	No Reducer
--	See each Rating Table for detail

Note:
Built-in Planetary or
Built-in Circulute

Note:
* Consult Factory

Mounting Code Ordering Code	D
0	Horizontal with Base
1	Output Shaft Down w/Flange
2	Output Shaft Up w/Flange
4	Output Shaft Down w/Base
5	Output Shaft Up w/Base
6	Horizontal with Flange
L	Wall Mount Left, Viewing from Output Shaft
R	Wall Mount Right, Viewing from Output Shaft
*	Special, please specify

Motor Speed Control Code (Bolt Circle of motor in mm) Ordering Code	E
00	Manual Handwheel
10	Manual Handwheel w/MGS
11	Open Loop, PM 115VAC
12	Open Loop, w/MGS PM 115VAC
14	Open Loop, w/Auxillary Handwheel, PM 115VAC
15	Open Loop, w/MGS and Auxillary Handwheel, PM 115VAC
31	Closed Loop, w/MGS PM 115VAC
32	Closed Loop, w/MGS and Auxillary Handwheel, PM 115VAC
33	Closed Loop, w/Pot Feedback PM 115VAC
35	Closed Loop, w/Pot Feedback and Auxillary Handwheel PM 115VAC
40	Open Loop, EXP PM 115VAC
41	Open Loop, w/EXP MGS EXP PM 115VAC
42	Closed Loop, w/EXP MGS EXP PM 115VAC
43	Hand Wheel w/EXP MGS
*	Special, please specify

Note:
PM: Pilot Motor
MGS: Magnetic Sensor
EXP: Explosion Proof

Worm Position Code Codes 1-6 are for the R_A-90 unit w/integral worm reducer only	H
0	Right angle reducer not used
1	Vertical up on left
2	Vertical down on left
3	Vertical up on right
4	Vertical down on right
5	Horizontal on left, worm under
6	Horizontal on right, worm under
B	Horizontal on right, worm over
C	Horizontal on left, worm under
9	Special, requires description

Main Motor Ordering Code	F
A	No Motor
B	1ph, 115/230VAC, 60Hz
C	3ph, 230/460VAC, 60Hz
*	Other, please specify

Motor Specification Ordering Code	G
Motor AA through AE are C-Face connected, 1750rpm	
AA	No Motor
AB	TEFC
AC	Wash Down
AD	Explosion Proof
AE	Brake Motor
Motor CB through CE are Top-mounted, 1750rpm	
CB	TEFC
CC	Wash Down
CD	Explosion Proof
CE	Brake Motor
99	Other, please specify

Speed Adjustment Ordering Code	I
0	800rpm top speed
	533rpm w/1165rpm Input
3	600rpm top speed
	400rpm w/1165rpm Input
4	1000rpm Top speed
*	Other, please specify

Environmental Ordering Code	J
0	Standard
2	Washdown protection for Handwheel unit, includes Wahdown Breather, V-Ring, Stainless Steel Sleeve under Oil Seal, and White Epoxy Painting
4	Washdown Breather only
5	Washdown protection for Electric Remote Control unit, includes Wahdown Breather, V-Ring, Stainless Steel Sleeve under Oil Seal, and NEMA4 at PM, and White Epoxy Painting
6	NEMA 4 at PM
*	Other, please specify

WARRANTY

The Company warrants the RXC Adjustable Speed Drive to be free from defects in materials and workmanship under normal use and proper maintenance for the warranty period. If within such period any product shall be proved to the Company's reasonable satisfaction to be defective, such product shall be repaired or replaced at Seller's option. The Company's obligation and the Buyer's exclusive remedy hereunder shall be limited to such repair or replacement and shall be conditioned upon the Company receiving written notice of any alleged defect no later than 10 days after its discovery within the warranty period and, at the Company's option the return of such product to the Company, transportation charges prepaid, when such return is feasible. The company reserves the right to satisfy its warranty obligation in full by reimbursing the Buyer for all payments made and the Buyer shall thereupon return the product to the Company. Products manufactured by others and supplied by the Company as part of the Company's product are not warranted by the Company and the Buyer's sole recourse shall be under the warranty, if any, of such other manufacturer.

These warranties shall not be effective if the product has been subject to overload, misuse, negligence or accident, nor if the product has been repaired or altered outside of our factory or authorized service station in any respect which in our judgement adversely affects its condition or operation.

THE FOREGOING WARRANTIES ARE EXCLUSIVE AND IN LIEU OF ALL OTHER EXPRESS AND IMPLIED WARRANTIES (EXCEPT OF TITLE INCLUDING BUT NOT LIMITED TO IMPLIED WARRANTIES OF MERCHANTABILITY, FITNESS FOR A PARTICULAR PURPOSE, PERFORMANCE, OR OTHERWISE), and in no event shall the Company be liable for claims (based upon breach of express or implied warranty, negligence, or otherwise) for any other damages, whether direct, immediate, incidental, foreseeable, consequential, or special.

INSPECTION

Unpack the drive and check to see that it is identical with that specified in the purchase order. Check its model number using the chart on the inside front cover of this manual. Inspect for shipping damage. Notify the shipping agent immediately if any damage is discovered

INSTALLATION

1. For handwheel controlled units, slide the handwheel onto the control shaft and secure it with bolt and washer provided. The control handwheel may be mounted on either end of the control cover.
2. Remove the tape from the input and output shafts and remove the protective coating using a solvent.
3. Install the unit in a clean, dry location with plenty of ventilation. A site in which rain or water is splashed around the unit should be avoided unless the drive has been specifically modified for these conditions.
4. Proper ambient temperature is from 32 F to 104 F. (0 C to 40 C). If the unit must operate with an extremely high or low ambient temperature, consult the factory.
5. The unit should be bolted down on a rigid, vibration-free base such as a concrete foundation, sturdy cast iron beam, or steel framework.

CAUTION

Standard units are equipped for either horizontal or vertical mounting. Do not mount the unit in other than the intended position. Refer to the mounting code in the model number to determine its intended mounting position. Contact the factory for information on mounting in a position other than the one indicated on the nameplate.

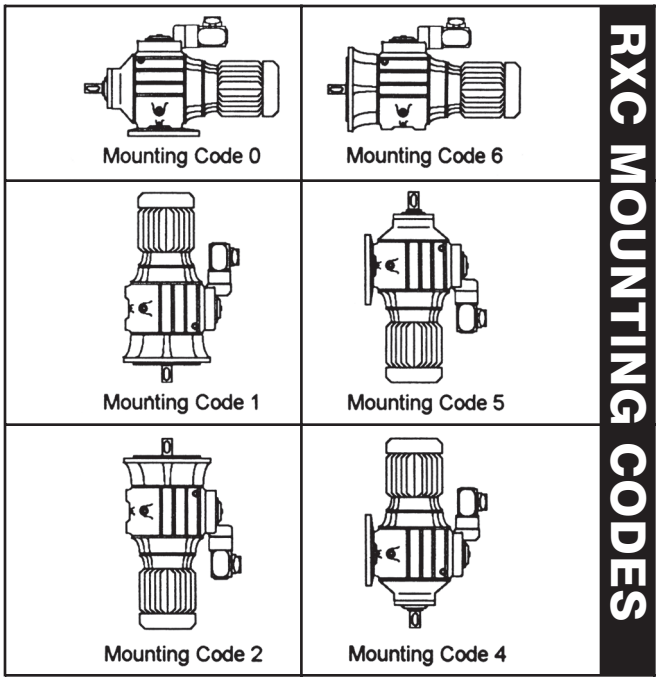

6. The RXC Adjustable Speed Drive should be selected so that it is operating at full output speed when the driven machine runs at maximum speed. While it can provide output speeds from maximum speed down to zero rpm, it should not be operated continuously in the bottom 20% of its speed range. If continuous low speed operation will be required, a speed reducer should be connected between the output of the RXC and the drive equipment. Shimpo Drives offers a wide range of speed reducers which can be built into the

RXC. Consult the factory for details.

7. Drives which use an input C-face mount for the drive motor have a set screw which is used to press the key tightly against the motor's shaft. Loosen this set screw before mounting the motor and be sure to tighten it once the motor is mounted in position.

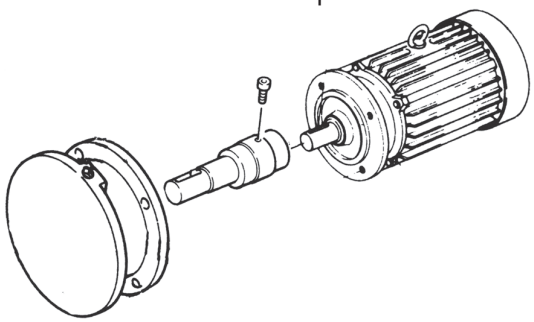

Exploded view showing the motor set screw. This is often under a rubber plug on the C-face.

8. Gears, pulleys, or sprockets which are mounted to the input or output shafts should slide on easily. Do not pound on them or on the shafts of the RXC. Pounding devices into place on the shafts can damage bearings and other drive components.

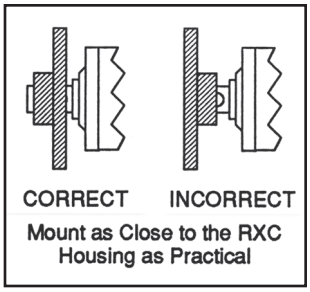

9. Mount any gears, pulleys, or sprockets as close to the housing of the RXC as is practical. If the load will be centered farther away than the middle of the shaft extension, consult the factory.
10 Secure the gear, pulley or sprocket to the shaft. If a key and set screw are used for this, the top of the key should have .004" to .008" (0.1 mm to 0.2 mm) of clearance.
11. The pitch circle diameter of the gear, pulley, or sprocket must be at least 5 times larger than the shaft diameter.
12. All connected devices must be checked carefully for angular and parallel alignment.
13. Check to ensure that the oil is filled to the center of the oil level gauge.
14, If a separate breather was supplied, install it. If the breather was provided with a plug or cover, remove it. Be sure the breather is not obstructed.
15. For units with output speed reducers, be sure the reducer is filled with the proper lubricant and the vent, if any is unobstructed. See the nameplate of the reducer for the proper reducer lubricant.

LUBRICATION

Unless otherwise specified, the RXC drive is shipped with the necessary quantity of oil. Therefore, no oil normally needs to be added. However, always be sure to check the oil level before putting the drive into operation.

ADJUSTABLE SPEED SECTION

RXC adjustable speed drives use an all metallic traction power transmission system. The lubricating oil not only lubricates the bearings and other moving parts, it is also the power transmission medium. The lubricant forms and maintains a film between all of the torque transmitting components. The properties of the lubricating oil and its cleanliness are very important to the proper performance and service life of the unit. Special synthetic traction oil must be used. This oil is available from Shimpo Drives. The proper lubricant for the adjustable speed section of the RXC drive is given in the table below.

SIZE	RXC Size	Oil	Oil Change Interval
2X - 7.5 X	02 - 75	TD -22*	every 20,000 hours of operation
8X	91 - 95	TD - 22	every 5,000 hours of operation

*TD-10 oil had been originally specified for these units. This can be replaced with TD-22. TD-22 oil can be mixed with TD-10 oil, if necessary.

The above oil change intervals assume that the drive is installed in a clean, dry location. More frequent oil changes may be required for severe operating conditions. The condition of the oil can be viewed through the oil level gauge. While it is common for the oil to darken in color during normal operation, the oil should be replaced if suspended particles are noticed in it, it becomes opaque, or it becomes contaminated.

Approximate oil capacities for the adjustable speed section of the RXC are listed in the table below. These quantities are only approximate. The oil level gauge should always be used to determine the proper oil level.

Size	RXC Size	Horizontal	Vertical
2X	02 - 04	0.05 gal	0.11 gal
3X	05 - 07	0.13 gal	0.26 gal
4X	10 - 15	0.21 gal	0.50 gal
5X	22	0.48 gal	0.72 gal
6X	37	0.66 gal	1.27 gal
7X	55	0.74 gal	1.43 gal
7.5X	75	0.58 gal	1.43 gal
8X	91 - 95	1.20 gal	4.00 gal

[1] plus the amount needed for the oil cooler

Input speeds below 900 RPM, ceiling mounts, and inclined units require special oil levels. Capacities shown do not apply to special applications. Do not change mounting position or input speed without contacting the factory.

OUTPUT SPEED REDUCER

The RXC and the output speed reducer, if any do not share a common lubricant. Both units must be maintained separately. If an output speed reducer is supplied, follow its lubrication schedule. The recommended lubricant for some common output speed reducers is shown below. Oil level plugs are used on most oil-filled output speed reducers. Add oil to these reducers until it reaches the level of the plug.

Size	RXC Size	Reducer Code	Lubricant	Shell	Mobil	Exxon
2X	02 - 04	83 & 85	NLGI No.0e EP Grease	Darina Grease EP No. 0	---	---
3X - 8X	05 -95	03 - 06	ISO VG220 Gear Oil	Omala Oil 220	Mobil Gear 630	Spartan EP 220
2X - 4X	02 - 15	A_, B_, C_	NLGI No.0 Grease	Darina Grease EP No. 0	---	---
4X - 8X	5 - 95	D_, E_, F_, G_	ISO VG220 Gear Oil	Omala Oil 220	Mobil Gear 630	Spartan EP 220

Lubrication Locations

Without Output Speed Reducer

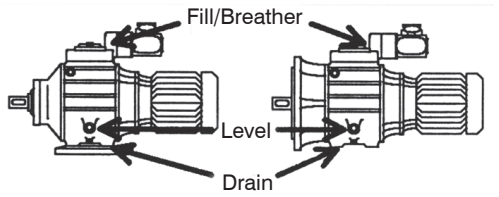

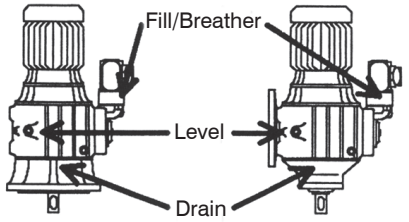

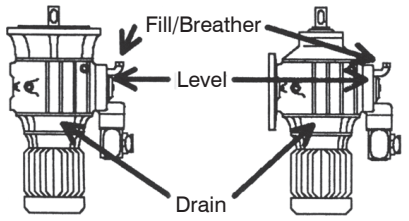

*** oil level gauge is often on the control cover**

RXC Size 02 - 75, 2X - 7.5X

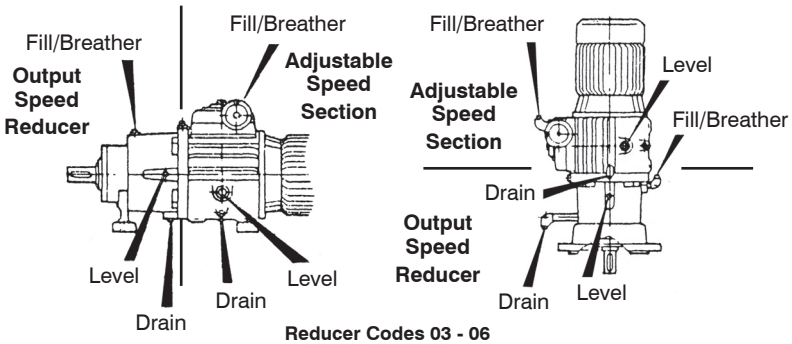

Reducer Codes 03 - 06
Reducer Codes 83 & 85 Are Grease Lubricated

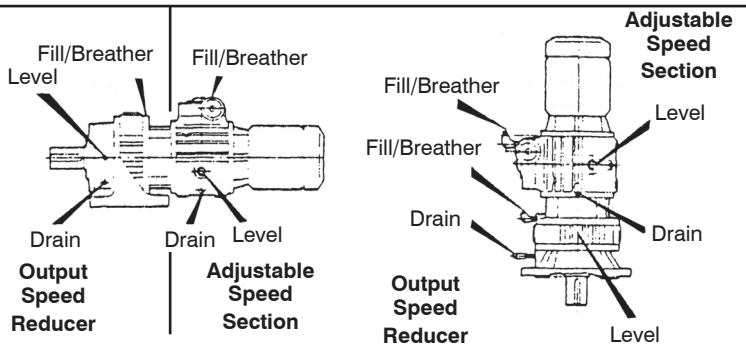

Reducer Codes D_ & E_
Reducer Codes A_ - C_ Are Grease Lubricated

RXC Sizes 91 - 95, 8X

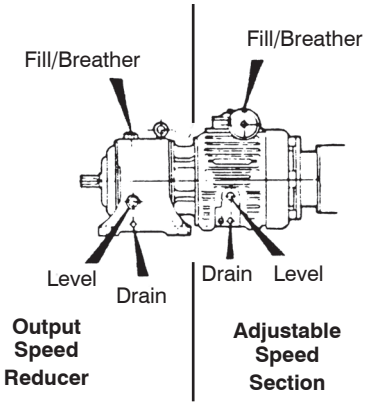

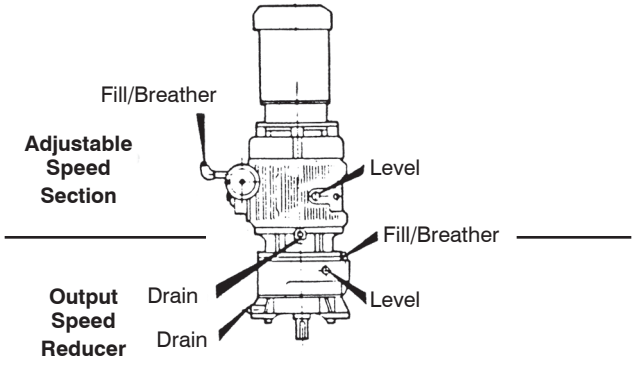

Reducer Codes 03 - 05

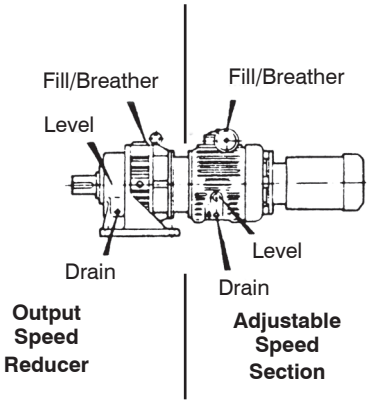

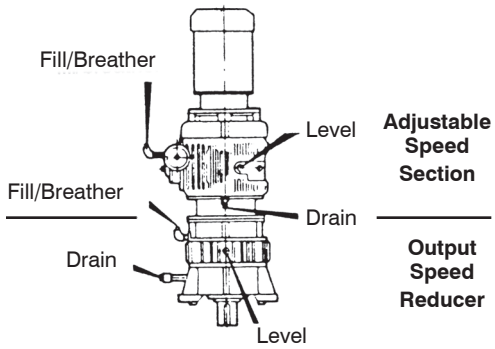

Reducer Codes F_ & G_

OPERATION

SHIFTING THE OUTPUT SPEED

The output speed is adjusted by turning the control wheel or operating the electric remote control. The speed of the RXC should be changed only when the main drive motor is running. Do not attempt to change the speed with the main drive motor stopped.

SPEED VARIATION

The RXC will run continuously at the set speed unless the load changes. As the output load increases, the output speed from the RXC will decrease. This speed change can be as much as 15% of the maximum speed of the drive. The dial graduations (right) indicate the speed decrease which will occur as the load changes from no load to full load. The dial can be used to set the drive to compensate for these speed changes. The electric remote control option may include a closed loop feedback system that automatically compensates for load changes and maintains the set speed regardless of load.

DIRECTIONS OF ROTATION

The RXC can be operated with either direction of input rotation. If the direction of rotation is to be changed during operation, the drive motor must first be completely stopped before reversing its direction.

MOTOR BRAKES

It is not normally necessary to provide a brake with the RXC drive. If one is required, it should be sized to provide up to 100% of the motor's normal full-load torque. The use of excessive braking torque can damage the RXC drive.

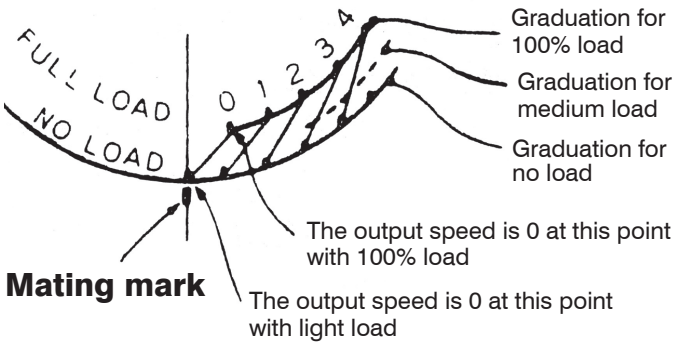

DISASSEMBLY PROCEDURE

After prolonged service, the unit may wear to the point that it requires rebuilding. Disassemble as follows referring to the exploded view drawings.

1. Drain the oil thoroughly.
2. Remove the top cover. Break the cover loose from housing with hammer and brass drift applied on left side of unit as viewed from output end.
3. Remove input and output housings using the jack-screw holes provided.
4. Remove the output assembly.
5. Remove the cam assembly.
6. Remove the control ring assembly.
7. Remove the input disc from the input shaft.

INSPECTION

1. Wash all parts in a solvent.
2. Remove all traces of the gaskets and other sealants from the mating surfaces.
3. Inspect and replace defective parts. Cones must be replaced as a set.

RE-ASSEMBLY PROCEDURE

1. Re-assembly should be done in the reverse order of disassembly.
2. Position the control ring at the low speed end of the guide shaft. This is toward the output shaft.
3. Insert the cones and cone retainer as one assembly.
4. Replace all gaskets.
5. After assembling the drive, adjust the contact pressure as described below.

CONTACT PRESSURE ADJUSTMENT

CAUTION

THIS ADJUSTMENT IS EXTREMELY IMPORTANT FOR PROPER OPERATION. DO NOT OPERATE AFTER REASSEMBLY WITHOUT MAKING THIS ADJUSTMENT.

Sizes 02, 04, and 37 through 95 (2x, 6x - 8x) with No Output Speed Reducer and with Output Speed Reducer Codes 03 through 06, 83 and 85

1. Position the control ring at the low speed end of the guide shaft. This is toward the output shaft.
2. Tighten the output bearing cover.
3. Mount a pulley on the output shaft and manually turn it in both directions to seat the internal parts.
4. Turn the pulley in both directions. The total backlash in the output shaft should be 1° to 3°, as shown. There must be a slight gap between these. This gap should be no greater than 0.1 mm.

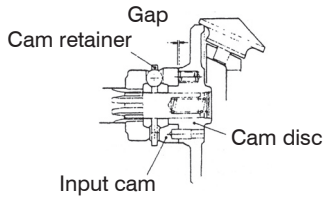

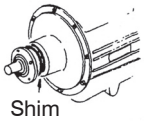

5. If the backlash of the output shaft is more than 3° , remove the bearing cover and insert shims.
6. If this backlash is less than 1°, remove shims.
7. Repeat steps 2 through 6 until an output shaft backlash of 1° to 3° is obtained.
8. This completes the procedure for sizes 05 through 15. For size 22, remove the bearing cover, add an additional 0.2 mm thick shim and tighten the bearing cover.

Sizes 05 through 22 (3x - 5x) with
No Output Speed Reducer

1. Position the control ring at the low speed end of the guide shaft. This is toward the output shaft.
2. Remove the control cover.
3. As illustrated, use a pliers to hold the cam retainer.
4. Turn the pliers in both directions. The total backlash in the cam retainer should be 1° to 3° , as shown.

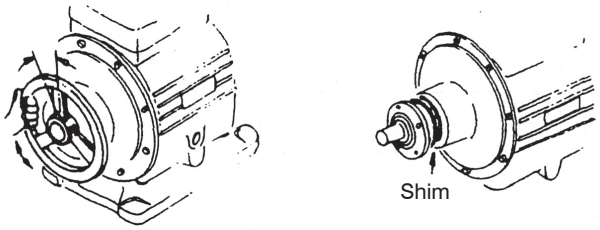

5. If the backlash of the output shaft is more than 3° , remove the bearing cover and insert shims.
6. If this backlash is less than 1° , remove shims.
7. Repeat steps 3 through 6 until an output shaft backlash of 1° to 3° is obtained.
8. This completes the procedure for sizes 05 through 15. For size 22, remove the bearing cover, add an additional 0.2 mm thick shim and tighten the bearing cover.

Sizes 05 through 22 (3x - 5x)
Output Speed Reducer Codes 03 through 06

1. Position the control ring at the low speed end of the guide shaft. This is toward the output shaft.
2. Remove the control cover.
3. As illustrated, use pliers to hold the cam retainer.
4. Turn the pliers in both directions. The total backlash in the cam retainer should be 1° to 3°, as shown.

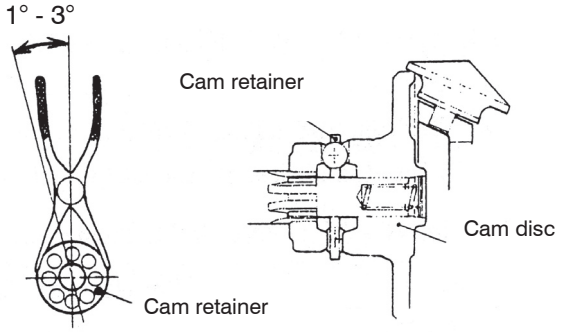

5. If the backlash of the output shaft is more than 3° , remove the bearing cover and insert shims.
6. If this backlash is less than 1° , remove shims.
7. Repeat steps 3 through 6 until an output shaft backlash of 1° to 3° is obtained.
8. This completes the procedure for sizes 05 through 15. For size 22, remove the bearing cover, add an additional 0.2 mm thick shim and tighten the bearing cover.

Sizes 02, 04 and 37 through 95 (2x, 6x - 8x) with
Output Speed Reducer Codes A_, B_, D_, E_, and F_

1. Position the control ring at the low speed end of the guide shaft. This is toward the output shaft.
2. Remove the control cover.
3. Insert a feeler gauge between the cam disc and the input as shown. There must be a slight gap between these. This gap should be no greater than 0.1 mm.

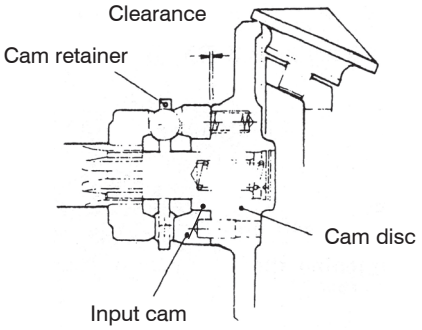

4. If the gap is greater than 0.1 mm, remove the ER flange's cover and use a rod or a T-handle wrench to turn the pressure adjuster and increase the contact pressure, as illustrated.
5. If there is no gap, remove the ER flange's cover and use a rod or a T-handle wrench to turn the pressure adjuster and decrease the contact pressure, as illustrated.
6. Repeat steps 3 through 5 until a gasp of up to 0.1 mm is obtained.
7. This completes the adjustment for sizes 02 and 04. For sizes 37 through 96, increase the pressure by turning the pressure adjuster one additional notch.
8. After completing the contact pressure adjustment, tighten the adjuster stop bolt into a notch on the pressure adjuster. This bolt is to keep the adjuster from turning. There must be some clearance between the bottom of it and the bottom of the notch on the pressure adjuster. It should not bottom out on the pressure adjuster.
9. Replace the ER flange's cover.

Sizes 05 through 22 (3x - 5x) with
Output Speed Reducer Codes A, B, D, E, and F

1. Position the control ring at the low speed end of the guide shaft. This is toward the output shaft.
2. Remove the control cover.
3. As illustrated, use pliers to hold the cam retainer.
4. Turn the pliers in both directions. The total backlash in the cam retainer should be 1° to 3°, as shown.

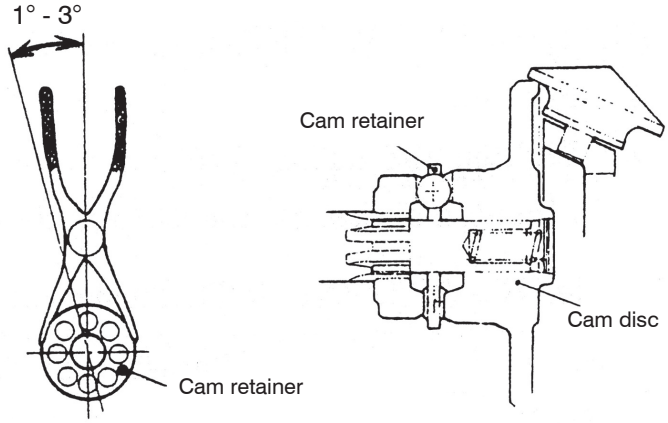

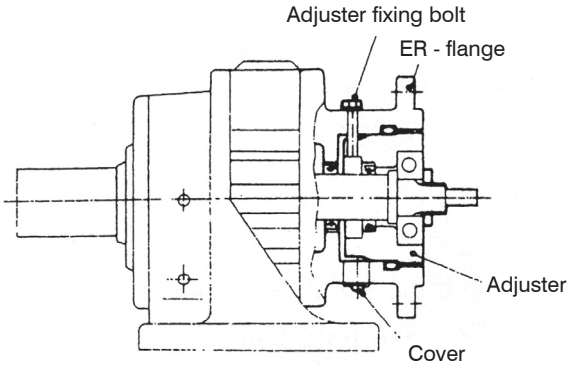

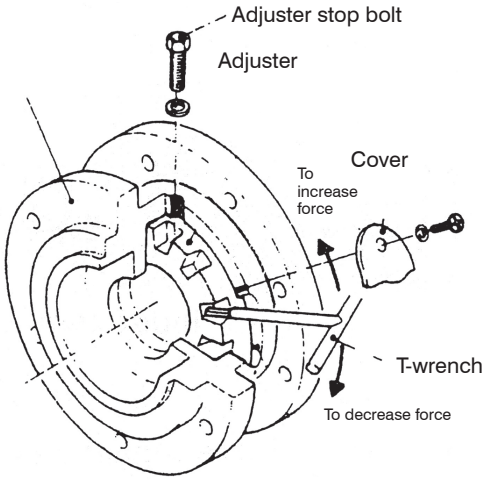

5. If the backlash of the output shaft is more than 3°, remove the ER flange's cover and use a rod or a T-handle wrench to turn the pressure adjuster and increase the contact pressure, as illustrated.
6. If this backlash is less than 1°, remove the ER flange's cover and use a rod or a T-handle wrench to turn the pressure adjuster and decrease the contact pressure, as illustrated.
7. Repeat steps 3 through 6 until an output shaft backlash of 1° to 3° is obtained.
8. This completes the adjustment for sizes 05 through 15. For size 22, increase the pressure by turning the pressure adjuster one additional notch.
9. After completing the contact pressure adjustment, tighten the adjuster stop bolt into a notch on the pressure adjuster. This bolt is to keep the pressure adjuster from turning. There must be some clearance between the bottom of it and the bottom of the notch on the pressure adjuster. It should not bottom out on the pressure adjuster.
10. Replace the ER flange's cover.

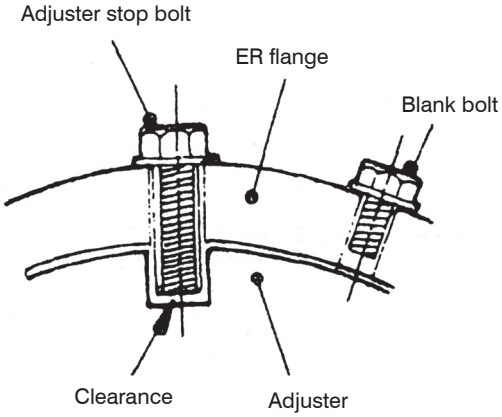

All sizes with other Output Speed Reducers

Other output speed reducers are C-face coupled to the RXC. These can be unbolted from the RXC. The contact pressure can then be adjusted in the same way as it is for an RXC with no output speed reducer.

Troubleshooting

Condition	Problem	Possible Cause	Solution
RXC drive motor does not rotate	Blown fuse	Excess load	Reduce the output load
		Damaged drive motor	Replace
	Overload	Damaged driven equipment	Check the driven equipment
		Improper RXC szie	Check the RXC selection for this load
RXC does not rotate, speed but its drives motor does	Low speed operation	RXC has shifted to zero	Shift the RXC to a higher speed
	Internal slipping	Wrong oil used	Be sure the specified oil is used
		Low contact pressure	Adjust the contact pressure
		Damaged RXC parts	Disassemble, inspect and repair
RXC does rotate	Case temperature more then 90F above ambient	Low motor voltage	Check and correct
		Excess load	Check the driven equipment
		Improper oil level	Check and correct
		Improper oil used	Rplace with specified oil
		Contaminated oil	Drain, rinse and replace
		High internal pressure	Adjust the contact pressure
	Output Speed Varies	Load variation	The output speed can drop as much as 15% of maximum speed if the load changes from 0 to full. A closed-loop electric control can eliminate this.
		Improper oil used	Replace with spacified oil
		Excessive load	Check the driven equipment
		Low internal pressure	Adjust the contact pressure
		Damaged parts	Disassemble, inspect and repair
		Low motor voltage	Check and correct
		Defective electric control	Check and correct
	Howling sound which does not change with output speed	Loss of one AC motor phase	Check and correct the AC power
			Check the AC motor
		Loose input set screw	Tighten the set screw over the motor shaft's key
	Howling sound which does change with output speed	Damaged RXC input parts	Disassemble, inspect and repair
		Damaged driven equipment	Check the driven equipment
		Damaged RXC output parts	Disassemble, inspect and repair

When the RXC Is Operated with No Load

Condition	Problem	Possible Cause	Solution
RXC drive motor does not rotate	Blown fuse	Defective Fuse	Replace
		Damaged drive motor	Replace
		Motor improperly installed	Re-install the drive motor
		Damaged RXC parts	Disassemble, inspect and repair
RXC does not rotate, but its drives motor does	Low speed operation	RXC is shifted to zero	Shift the RXC to a higher speed
	Motor connection	No input key installed	Check and correct
	Internal damage	Damaged parts	Disassemble, inspect and repair
RXC rotates in reverse	Motor turning in reverse	Motor wired for reverse operation	Re-wire motor for the opposite direction of rotation
	Extreme low speed operation	Low speed stop set incorrectly	Re-set low speed stop
RXC does rotate	Howling sound	Loss of one AC motor phase	Check and correct the AC power
			Check the AC motor
		Loose input set screw	Tighten the set screw over the motor shaft's key
		Damaged RXC input parts	Disassemble, inspect and repair

Under Any Operating Condition

Condition	Problem	Possible Cause	Solution
Oil leak	Excessive pressure	Blocked breather	Check and correct
		Excessive oil level	Check and correct
	Leaky gasket, O-ring, or oil seal	Loose bolt	Tighten
		Worn parts	Check and correct

Index to the RXC Exploded View Drawings

Adjustable Speed Section,
Sizes 02 - 75, (2X - 7.5X) 13
Adjustable Speed Section,
Sizes 91 & 95 14
Input C-Faces,
RXC Sizes 02 - 95, (2X - 8X) 15
Input Shaft Assemblies,
Sizes 02 - 15, (2X - 4X) 16
Input Shaft Assemblies,
Sizes 22 - 95, (5X - 8X) 17
Output Sections with No Speed Reducers or
C-Face Coupled to a Speed Reducer,
Sizes 02 - 95, (2X - 8X) 18
Speed Reducers,
RXC Sizes 02 & 04, (2X)
Reducer Codes 83 & 85 19
Speed Reducers,
RXC Szies 05 - 75, (3X - 7.5X)
Reducer Codes 03 & 06 20
Speed Reducers,
RXC Sizes 91 & 95, (8X)
Reducer Codes 03 & 05 21
Speed Reducers,
RXC Sizes 02 - 15, (2X - 4X)
Reducer Codes A_, B_, & C_ 22
Speed Reducers,
RXC Sizes 15 - 75, (5X - 7.5X)
Reducer Codes D_, E_, & F_ 23
Speed Reducers,
RXC Sizes 91 & 95, (8X)
Reducer Code F_ 24
Speed Reducers,
RXC Sizes 91 & 95, (8X)
Reducer Code G_ 25
Speed Controls,
Sizes 02 - 75, (2X - 7.5X) 26
Speed Controls,
Sizes 91 & 95, (8X) 27

Oil Seal Sizes

The size of the oil seals used is shown in the Exploded View Drawings as follows:

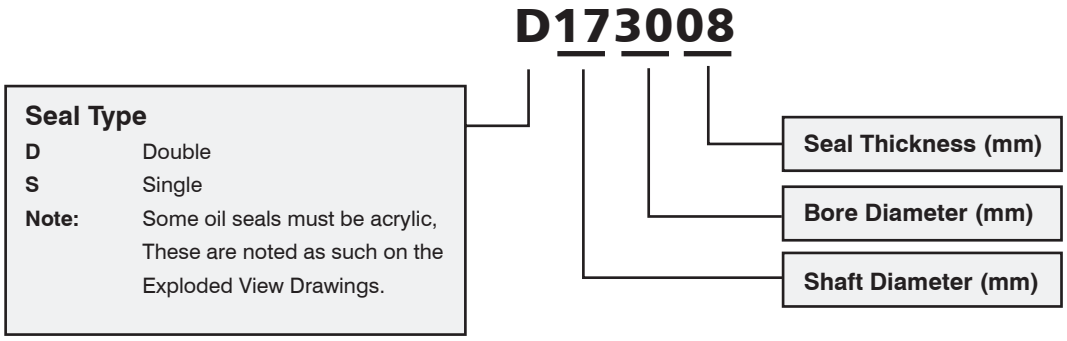

Adjustable Speed Section, Sizes 02 - 75, (2X - 7.5X)

PARTS LIST

1 Cone Retainer
2 Cone
3 Ring
4 Rubber Plug
5 Washer
6 Guide Shaft
7 Base
8 Magnetic Plug
9 Case
10 Snap Ring
15 Output Cam
16 Cam Retainer
17 Cam Disc
18 Input Cam
19 Auxiliary Spring
20 Spring
21 Pin
22 Spring Seat
23 Snap Ring
24 Rack Gear Holder
25 Rack Gear
71 Input Disc

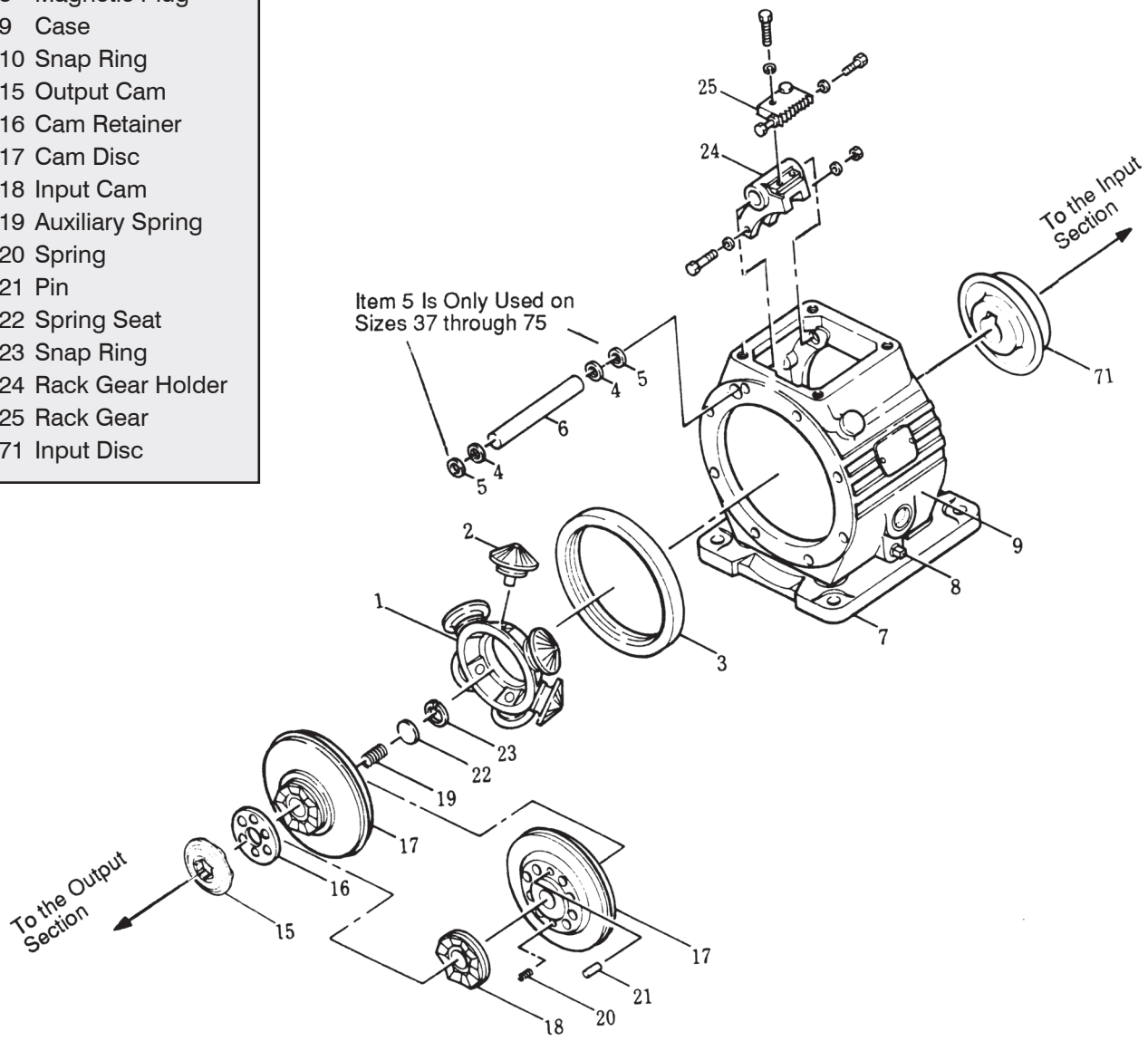

For Sizes 02, 04, 37, 55, and 75

Adjustable Speed Section, Sizes 91 & 95, (8X)

PARTS LIST

1	Cone Retainer	17	Cam Disc
2	Cone	18	Input Cam
3	Ring	19	Auxiliary Spring
4	Rubber Plug	20	Spring
5	Washer	21	Pin
6	Guide Shaft	22	Spring Seat
7	Base	23	Snap Ring
8	Magnetic Plug	24	Rack Gear Holder
9	Case	25	Rack Gear
10	Snap Ring	41	Outlet Oil Valve
15	Output Cam	42	Inlet Oil Valve
16	Cam Retainer	70	Snap Ring
		71	Input Disc

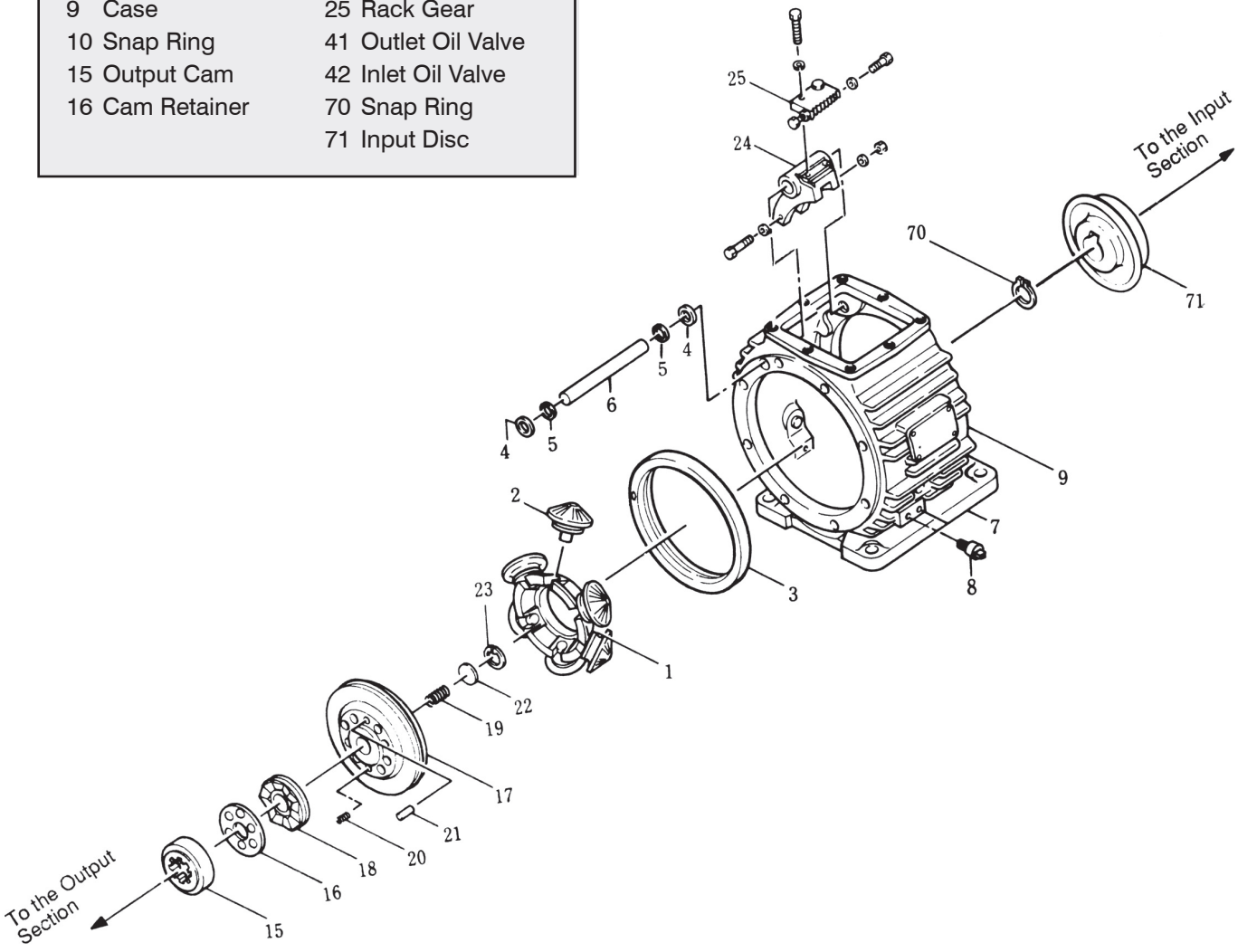

Input C-Faces, RXC Sizes 02 - 95, (2X - 8X)

PARTS LIST

74	Input
75	Rubber Plug
76	Fan
77	Hollow Input Shaft
78	Snap Ring
79	Wave Washer
80	Fan Cover
83	Snap Ring
90	Gasket
96	Spacer
106	Oil Plate
D-F	Bearings
S	Oil Seal

Size	RXC Size	Bearing D	Bearing E	Bearing F	Oil Seal S
2X	02 - 04	51204	6005ZZ	6005ZZ	S254008
3X	05 - 07	51204	6006ZZ	6006ZZ	S254008
4X	10 - 15	51405	6008ZZ	6008ZZ	S304508
5X	22	51407	6209ZZ	6209ZZ	S355008
6X	37	51408	6209ZZ	6209ZZ	S405508
7X, 7.5X	55 - 75	51410	6210LLU	6011LLU	S507212
8X	91 - 95	6013ZZ	6213LLU	6212ZZ	S659013

[1] Oil seal must be acrylic.

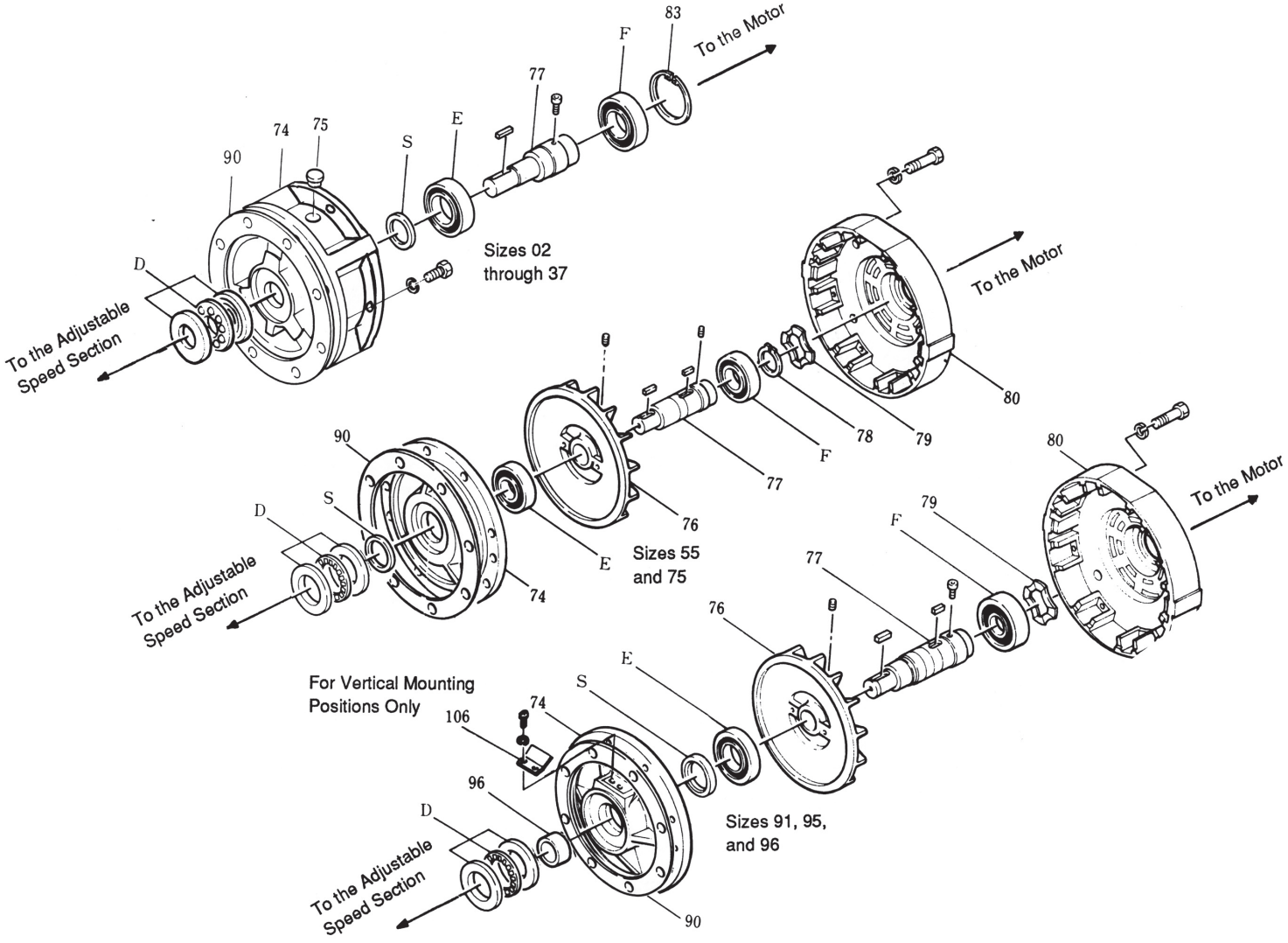

Input Shaft Assemblies. Sizes 02 - 15, (2X - 4X)

PARTS LIST

72	Spacer
73	Spacer
74	Input Shaft Holder
78	Snap Ring
79	Wave Washer
86	Input Shaft
90	Gasket
D-F	Bearings
S	Oil Seal

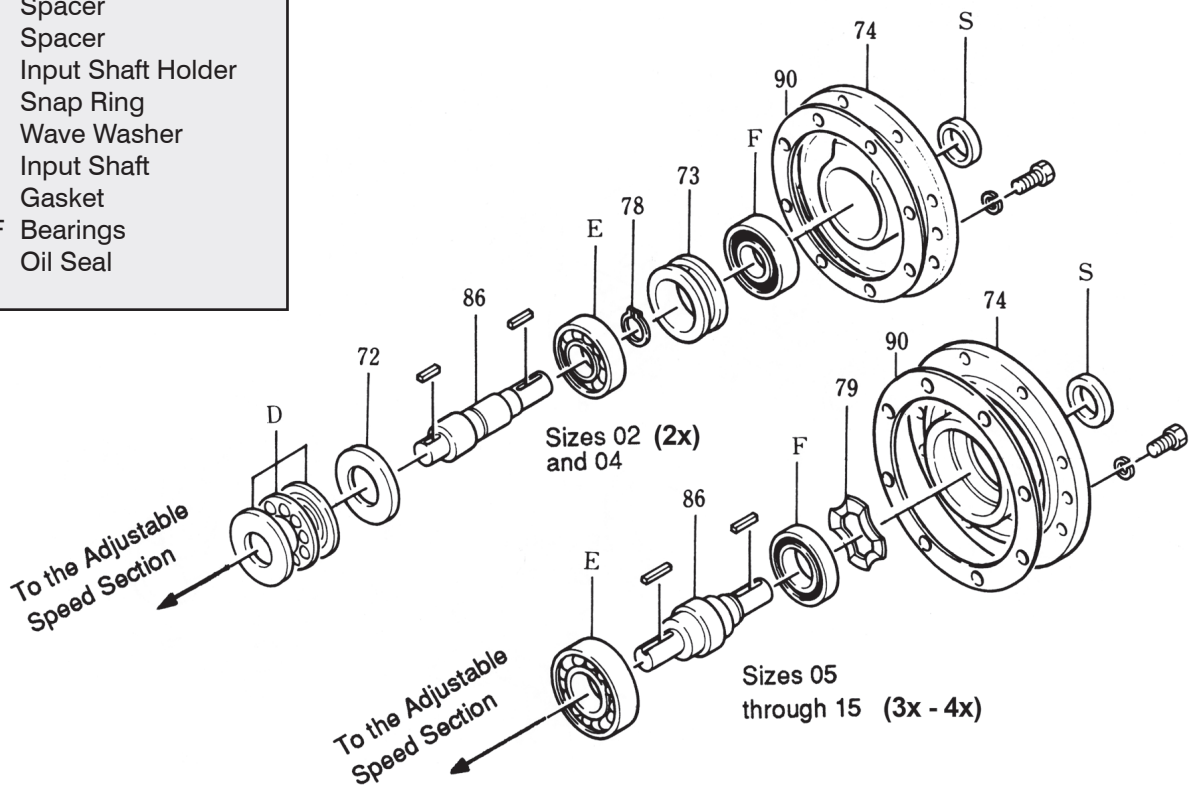

Size	RXC Size	Bearing D	Bearing E	Bearing F	Oil Seal S
2X	02 - 04	51204	6203	6203ZZ	D173208
3X	05 - 07	---	6305	6005ZZ	D203508
4X	10 - 15	---	6307	6007ZZ	D254008

[1] Oil seal must be acrylic.

Input Shaft Assemblies, Sizes 22 - 95, (5X - 8X)

PARTS LIST

74	Input Shaft Holder
76	Fan
78	Snap Ring
79	Wave Washer
80	Fan Cover
86	Input Shaft
90	Gasket
96	Spacer
D-G	Bearings
S	Oil Seal

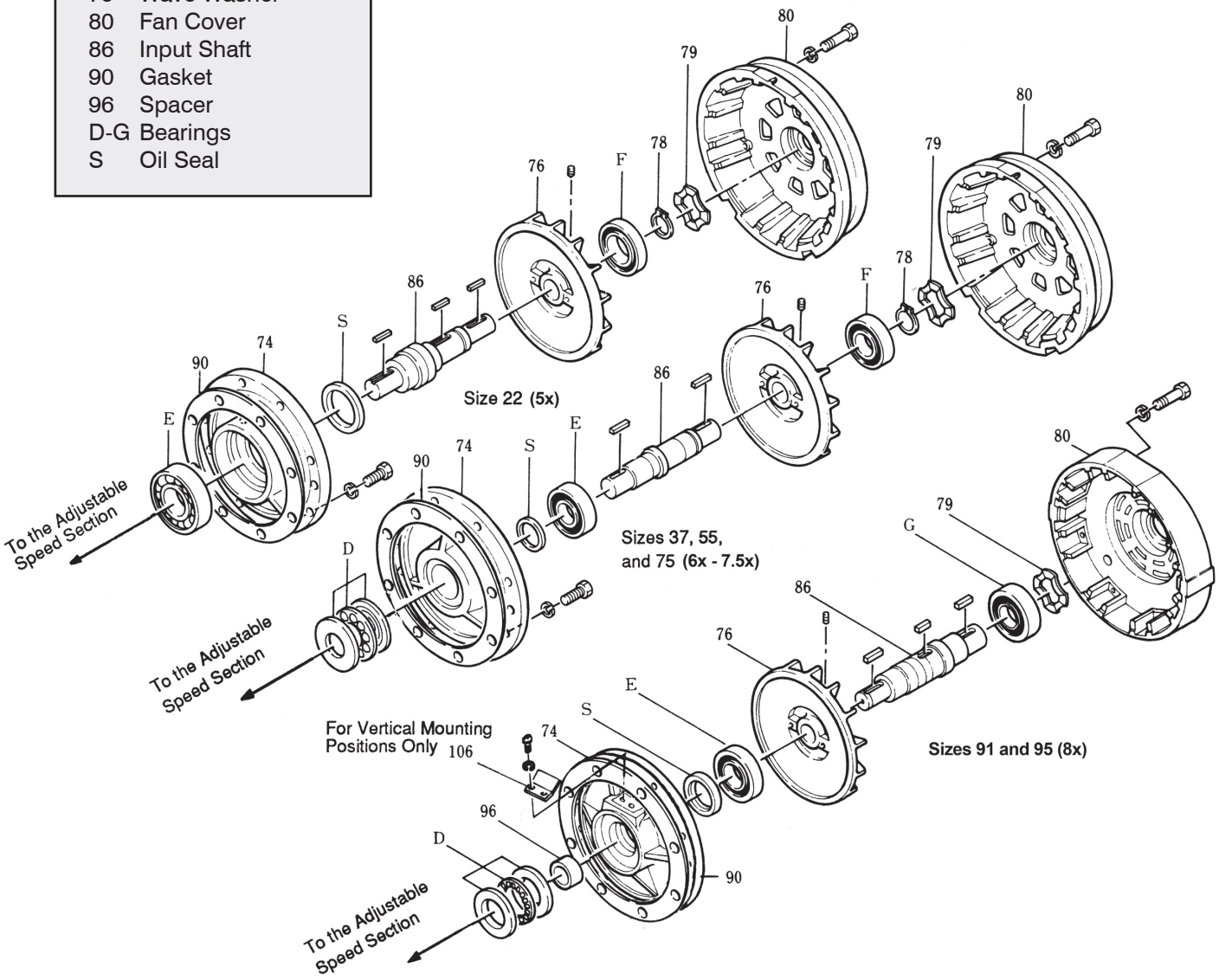

Size	RXC Size	Bearing D	Bearing E	Bearing F	Bearing G	Oil Seal S
5X	22	---	6309	6206ZZ	---	D507212
6X	37	51407	6207ZZ	6207ZZ	---	S355008
7X, 7.5X	55 - 75	51410	6210LLU	6210LLU	---	S507212
8X	91 - 95	89315Z	6213LLU	---	6311LLU	S659013

[1] Oil seal must be acrylic.

Output Sections with No Speed Reducer or C-Face Coupled to a Speed Reducer, Sizes 02 - 95, (2X - 8X)

PARTS LIST

10	Snap Ring	37	Output Shaft Holder
11	Spacer	38	Gasket
12	Spacer	101	Output Flange
13	Shaft	104	Nipple
34	Bearing Cover	A-C	Bearings
35	O-Ring	R	Oil Seal
36	Shim		

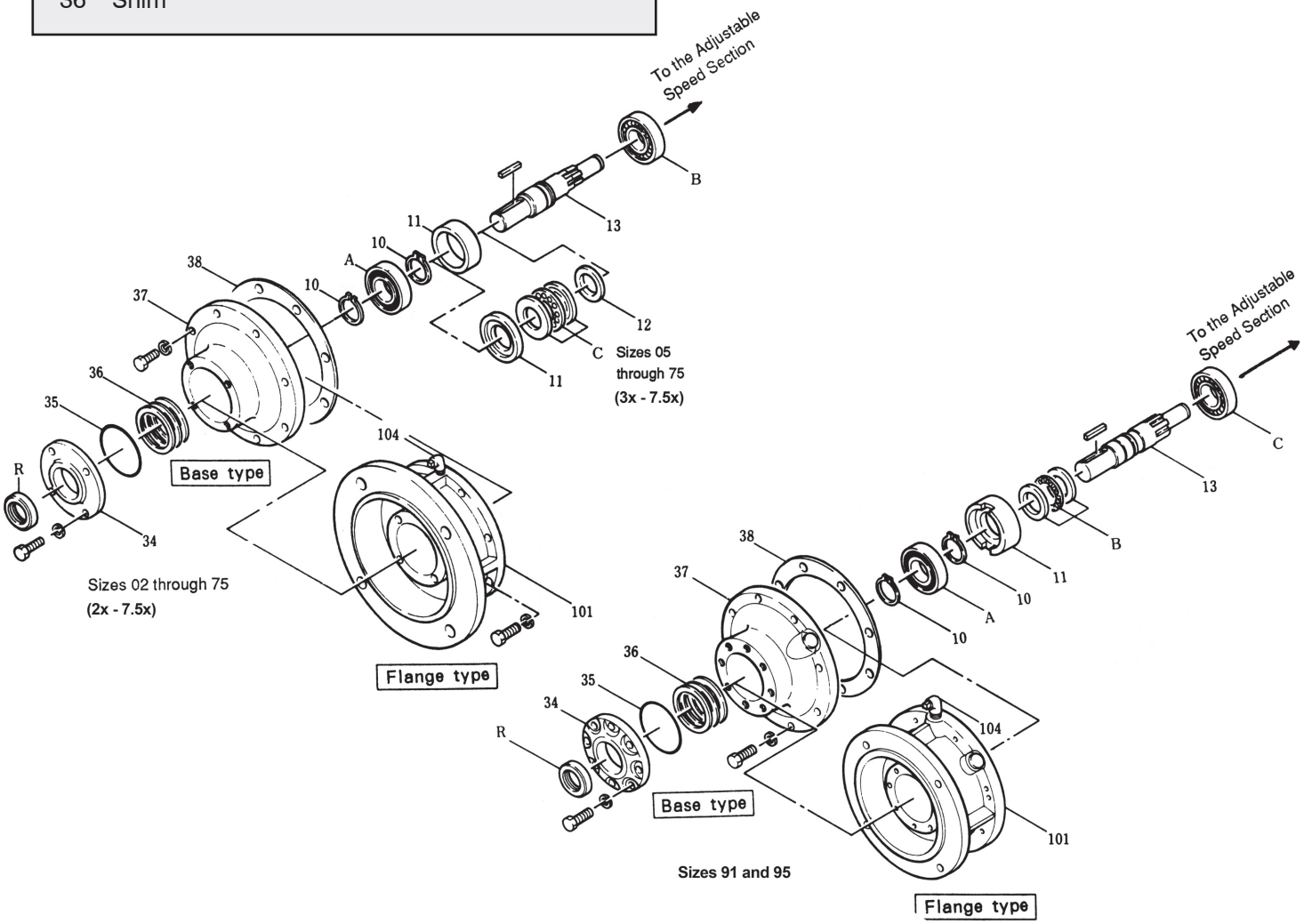

Size	RXC Size	O-Ring	Bearing A	Bearing B	Bearing C	Oil Seal S
2X	02 - 04	46-49-2	6203ZZ	6203	---	D173008
3X	05 - 07	53-57-2.2	6204ZZ	6204	51204	D203508
4X	10 - 15	68-72-3.1	6206ZZ	6206	51206	D304508
5X	22	80-85-3.1	6207ZZ	6207	51207	D355008
6X	37	90-94-2.2	6208ZZ	6307	51307	D405808
7X, 7.5X	55 - 75	100-105-3.1	6210ZZ	6308	51308	D507212
8X	140-145-3.1	140-145-3.1	6312ZZ	812112	6312	D608212

[1] Oil seal must be acrylic.

Speed Reducers, RXC Sizes 02 & 04, (2X)
Reducer Codes 83 & 85

PARTS LIST

201 Base A	214 Bearing Cover
202 Gear Case	215 O-Ring
204 Gasket	216 Joint
206 Shim	217 Coupler
207 Snap Ring	281 Output Flange
209 Gear Assembly	2A-D Bearings
210 Output Shaft	2R-S Oil Seals
213 Shaft	

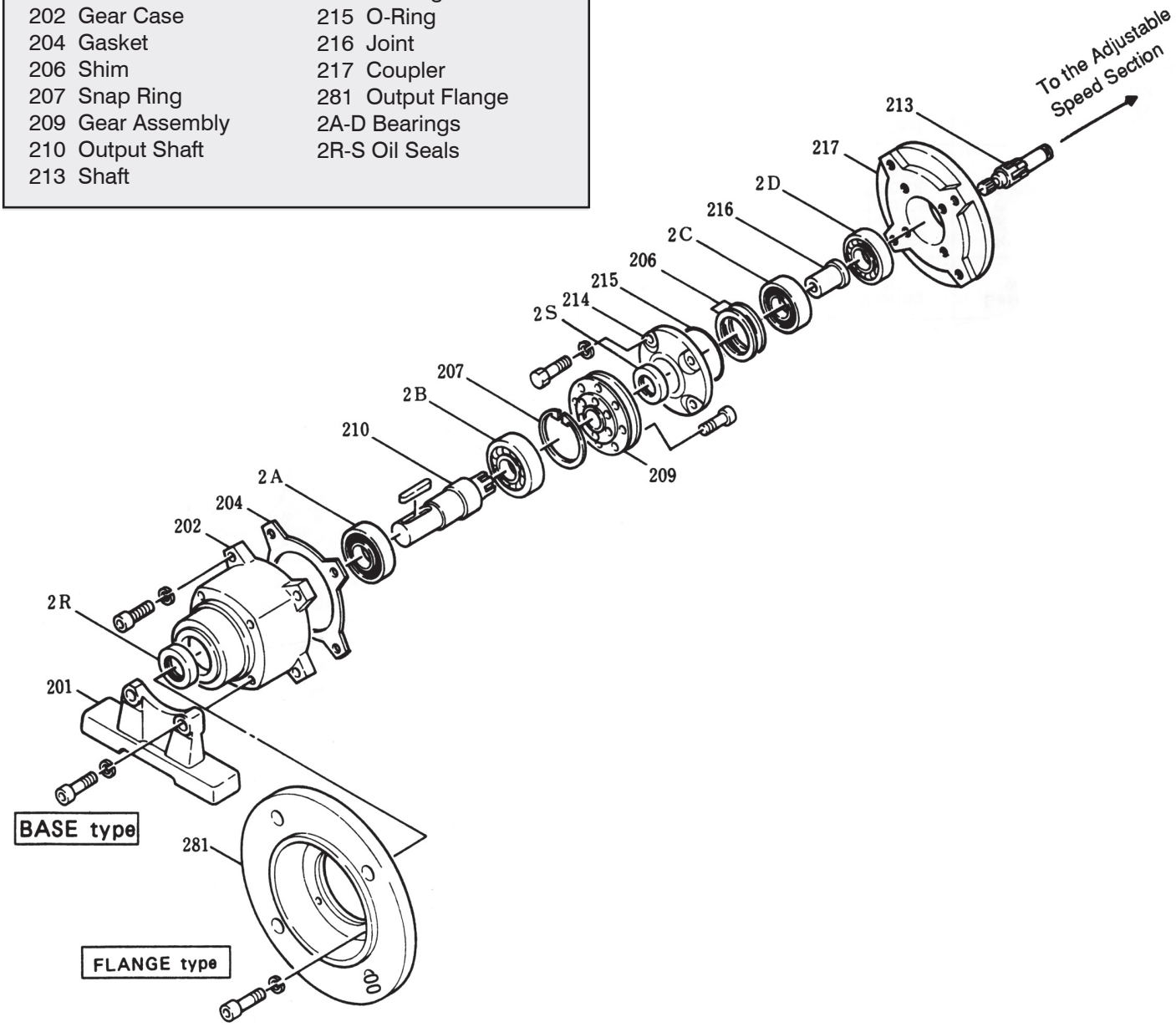

Size	RXC Size	Bearing 2A	Bearing 2B	Bearing 2C	Bearing 2D	Oil Seal 2R	Oil Seal 2S
2X	02 - 04	6205ZZ	6304ZZ	6204ZZ	6303	D254008	S203508

[1] Oil seal must be acrylic.

Speed Reducers, RXC Sizes 05 - 75, (3X - 7.5X) Reducer Codes 03 & 06

PARTS LIST

201 Base A	210 Output Shaft	218 Planetary Gear Pin	224 Plug
202 Gear Case	211 Spring Pin	219 Spacer	225 Spacer
203 Plug	212 Sun Gear	220 Planetary Gear	281 Output Flange
205 O-Ring	213 Shaft	221 Snap Ring	2A-G Bearings
206 Shim	214 Bearing Cover	222 Snap Ring	2R-S Oil Seals
208 Snap Ring	215 O-Ring	223 Coupler	

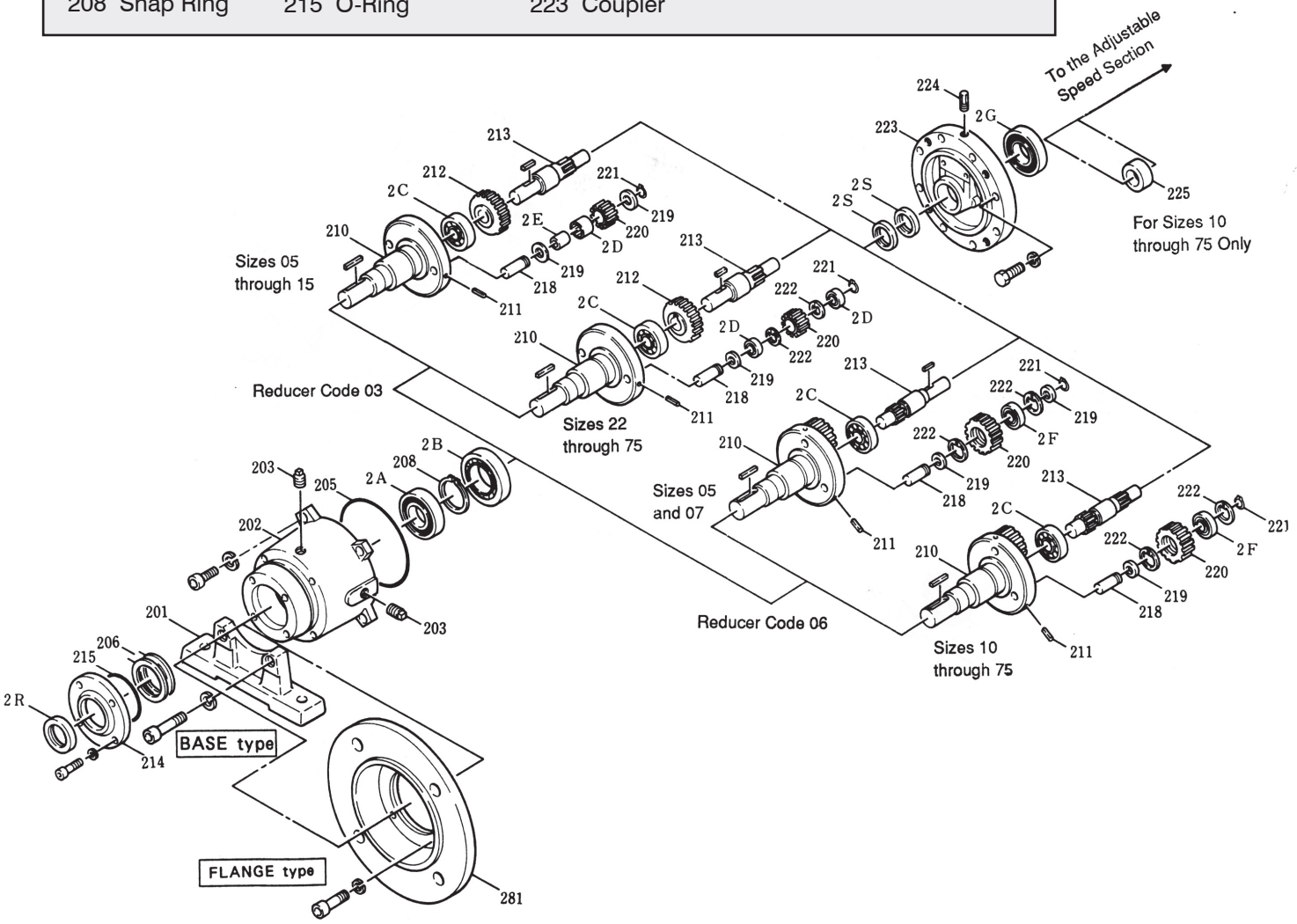

Size	RXC Size	Bearing 2A	Bearing 2B	Bearing 2C	Bearing 2D	Bearing 2E
3X	05 - 07	6206LLU	6007	4T-30203	HK1212	IR812X12.5
4X	10 - 15	6207LLU	6009	4T-30204	HK1516	IR1215X16.5
5X	22	4T-30208	6010	4T-30205	6001	
6X	37	4T-30210	6012	4T-30206	6002	
7X, 7.5X	55 - 75	4T-30211	6013	4T-30207	6002	

Size	RXC Size	Bearing 2F	Bearing 2G	Oil Seal 2R	Oil Seal 2S
3X	05 - 07	6200	6203ZZ	D304508	S254008
4X	10 - 15	6202	6205ZZ	D355008	S324508
5X	22	6203	6206ZZ	D405808	S385508
6X	37	6204	6207ZZ	D507209	S426509
7X, 7.5X	55 - 75	6205	6208ZZ	D557209	S507209

[2] 2 per assembly

[3] 3 per assembly

[4] 4 per assembly

Speed Reducers, RXC Sizes 91 & 95, (8X)
Reducer Codes 03 & 05

PARTS LIST

10	Snap Ring	258	Secondary Gear	269	Locknut for Primary Pinion	2A-D	Bearings
11	Spacer	259	Output Shaft	270	Stud Bolt	2R-S	Oil Seals
13	Shaft	260	Key for Primary Pinion	271	Input Bolt		
39	Coupler	261	Key for Primary Gear	272	Bolt for Low Speed Cover		
81	Gasket	262	Key for Secondary Gear	273	Bolt for Low Speed Bearing Housing		
251	Reducer Housing	263	Spacer for Secondary Pinion	274	Input Gasket		
253	Cover	264	Drain Plug	275	Speed Ring Gasket		
254	Bearing Housing	265	Oil Gauge	276	Low Speed Cover Gasket		
255	Primary Pinion	266	Vent Hole	277	Shim for the Secondary Pinion's Bearings		
256	Primary Gear	267	Eye Bolt	278	Shim for the Low Speed Shaft's Bearings		
257	Secondary Pinion	268	Pin for Cover	A-C	Bearings		

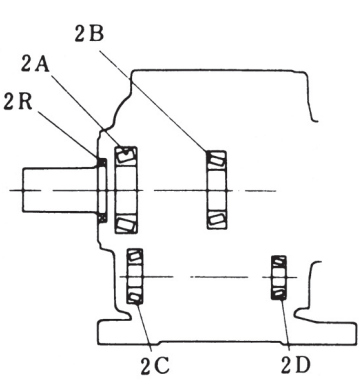

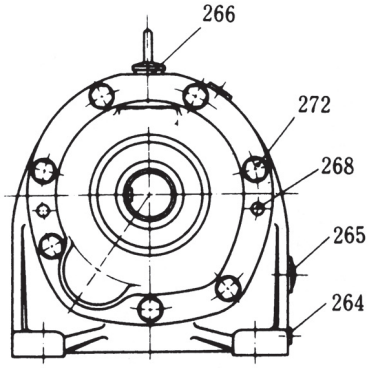

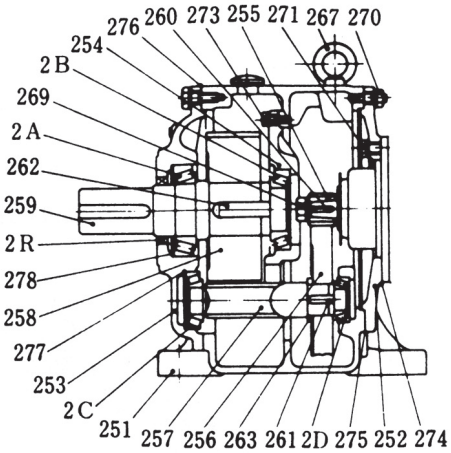

Size	RXC Size	Reducer Code	Bearing 2A	Bearing 2B	Bearing 2C	Bearing 2D	Oil Seal 2R
8X	91 - 95	03	HR32212J	HR32211J	HR30306J	HR32205	D608212
8X	91 - 95	05	HR32216J	HR32213J	HR30308J	HR32207J	D800513

Size	Reducer Code	Bearing A	Bearing B	Bearing C	Cil Seal 2S
8X	91 - 95	6312ZZ	81212	6312	D608212

[2] Oil seal must be acrylic.

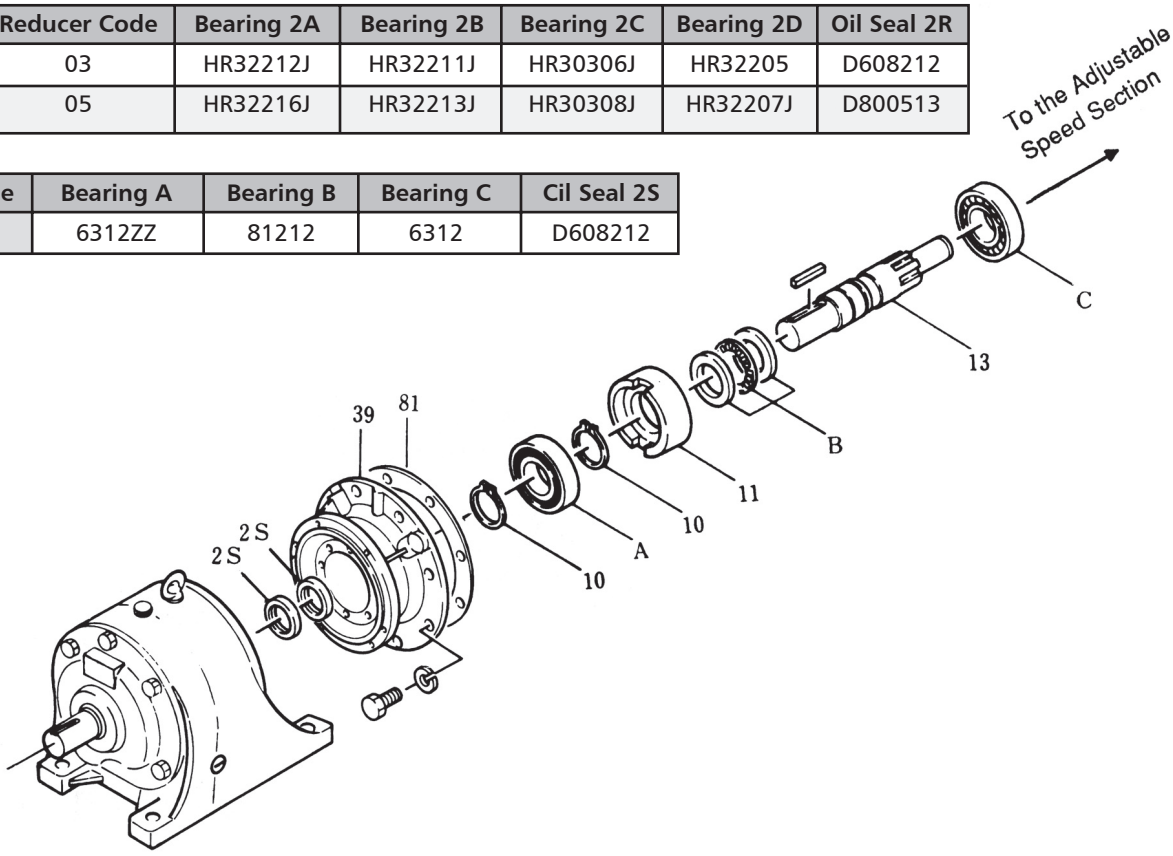

Speed Reducers, RXC Sizes 02 - 15, (2X - 4X)
Reducer Codes A_, B_, & C_

Reducer Code	Bearing 3A	Bearing 3B	Bearing 3C	Bearing 3G	Oil Seal 3R
A_	6206	6008	NF153212	IR121512	D304508
B_	6307	6208	NF153212	IR121512	D456008
C_	6309	6212	NF2204	IR172016	D557009

Size	RXC Size	Bearing 3E	Bearing 3F	Oil Seal 3S
2X	02 - 04	6304	---	D263808
3X	05 - 07	6305ZZ	51204	D304508
4X	10 - 15	6306ZZ	51206	S355008

[2] 2 per assembly

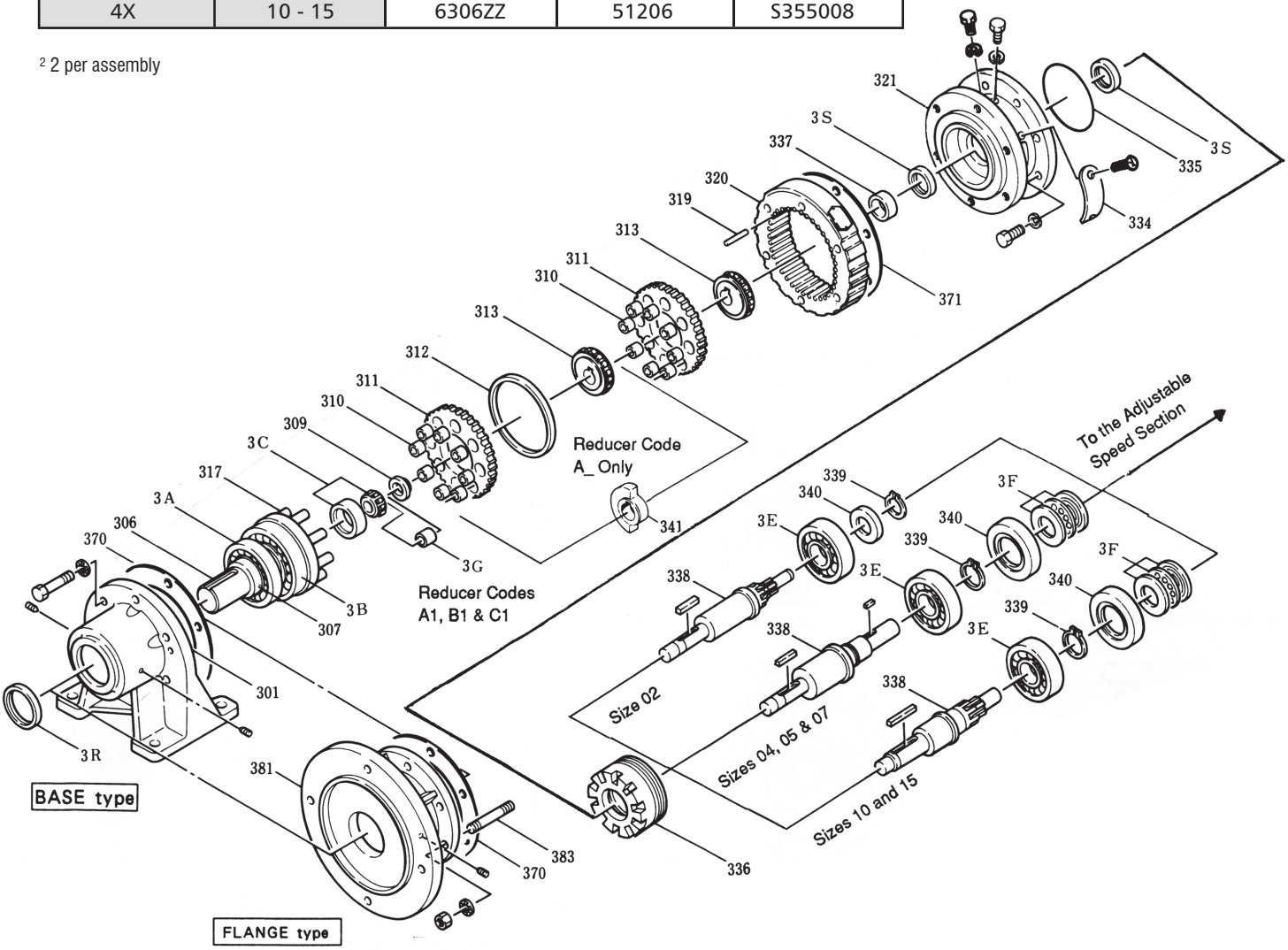

PARTS LIST

301 Base
306 Output Shaft
307 Bushing
309 Spacer
310 Busing
311 Wheel
312 Wheel Spacer
313 Eccentric Roller Bearing
317 Carrier Pin
319 Internal Pin
320 Internal Pin Housing
321 ER Flange
334 Cover
335 O-Ring
336 Pressure Adjuster
337 Bushing
338 Intermediate Shaft
339 Snap Ring
340 Bearing Support
341 Balance Weight
370 Gasket
381 Output Flange
383 Stud Bolt
3A-G Bearings
3R-S Oil Seals

Speed Reducers, RXC Sizes 15 - 75, (4X - 7.5X) Reducer Codes D_, E_, & F_

Reducer Code	Bearing 3A	Bearing 3B	Bearing 3C	Bearing 3G
D1	6213NR	NF2204	6010	D750013
D2 - D7	6213NR	NF2305	6210	D750013
E1	6315NR	NF2305	6015	D850013
E2 - E7	6315NR	NF2306	6015	D850013
F1	6319NR	NF2306	6216	D104014
F2 - F7	6319NR	NF2308	6216	D104014
Size	**RXC Size**	**Bearing 3E**	**Bearing 3F**	**Oil Seal 3S**
4X	10 - 15	6306ZZ	51206	S355008
5X	22	6307ZZ	51207	S506509
6X	37	6307ZZ	51307	S506509
7X, 7.5X	55 - 75	6309ZZ	51308	S557209

[2] 2 per assembly

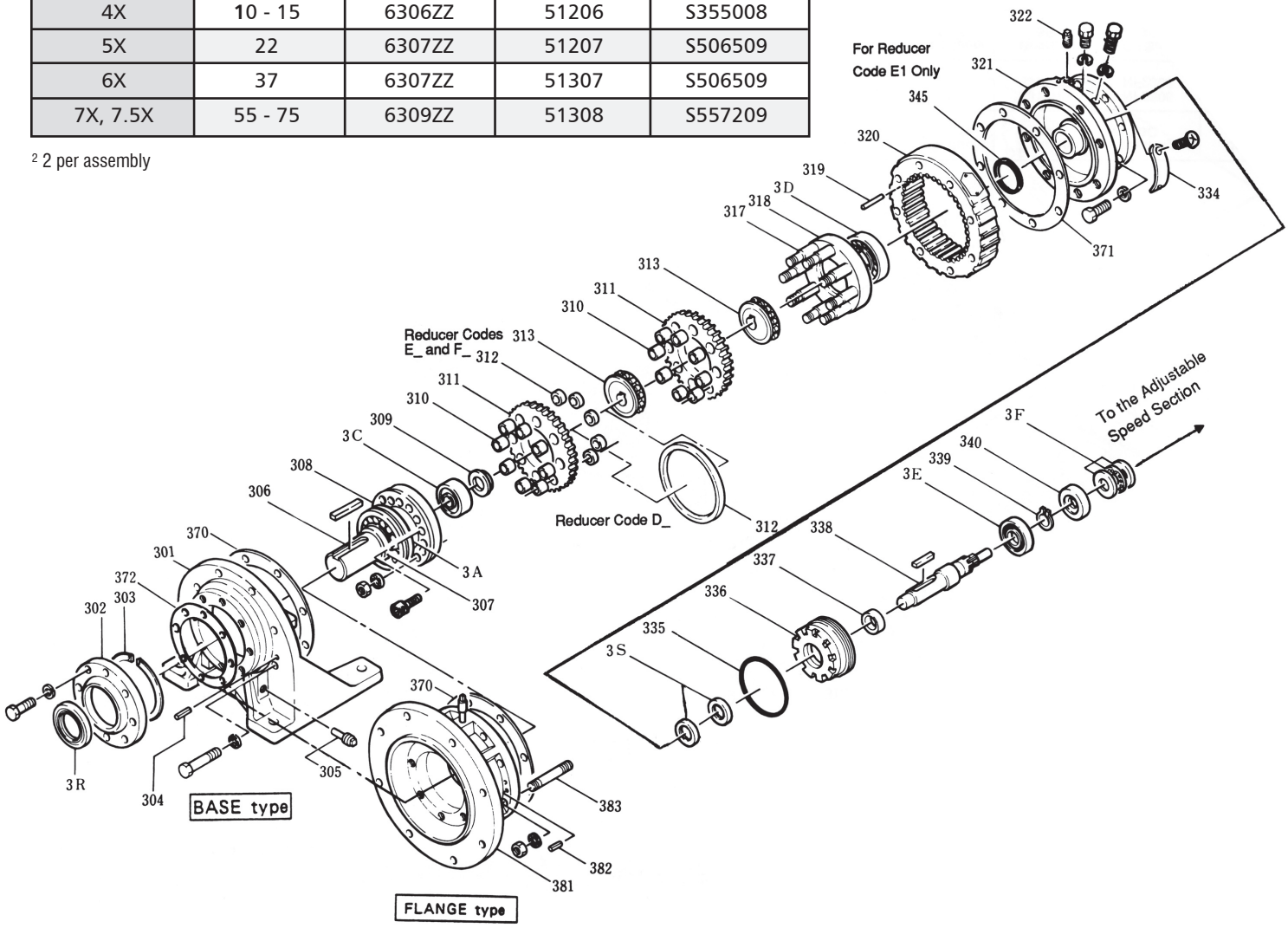

PARTS LIST

301 Base	310 Busing	322 Plug	370 Gasket
302 Bearing Cover	311 Wheel	334 Cover	371 Gasket
303 Snap Ring	312 Wheel Spacer	335 O-Ring	372 Gasket
304 Spring Pin	313 Eccentric Roller Bearing	336 Pressure Adjuster	381 Output Flange
305 Magnetic Plug	317 Carrier Pin	337 Busing	382 Spring Pin
306 Output Shaft	318 Holder	338 Shaft	383 Stud bolt
307 Output Shaft Bushing	319 Internal Pin	339 Snap Ring	3A-I Bearings
308 Spacer	320 Internal Pin Housing	340 Bearing Support	3R-SOil Seals
309 Spacer	321 ER Flange	345 Spacer	

Speed Reducers, RXC Sizes 91 & 95, (8X)
Reducer Code F_

PARTS LIST

301 Base
302 Bearing Cover
303 Snap Ring
304 Spring Pin
305 Magnetic Plug
306 Output Shaft
307 Output Shaft Bushing
308 Spacer
309 Spacer
310 Bushing
311 Wheel
312 Wheel Spacer
313 Eccentric Roller Bearing
317 Carrier Pin
318 Holder
319 Internal Pin
320 Internal Pin Housing
321 ER Flange
322 Plug
323 Rubber Plug
337 Busing
338 Shaft
339 Snap Ring
370 Gasket
371 Gasket
372 Gasket
381 Output Flange
382 Spring Pin
383 Stud bolt
3A-E Bearings
3R-S Oil Seals

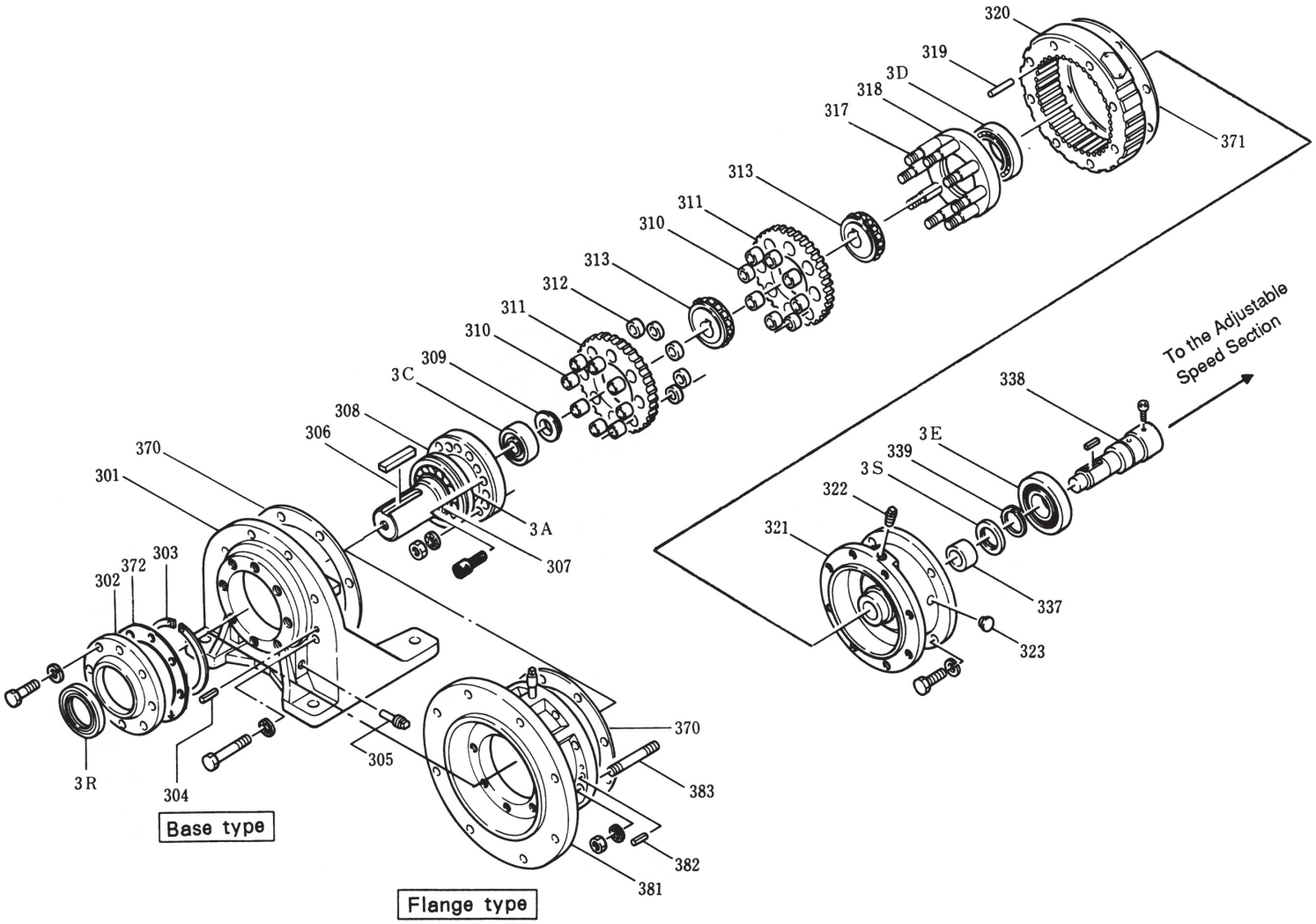

Reducer Code	Bearing 3A	Bearing 3C	Bearing 3D
F1	6319NR	NF2306	6216
F2 - F7	6319NR	NF2308	6216
Reducer Code	**Bearing 3E**	**Oil Seal 3R**	**Oil Seal 3S**
F1	6314ZZ	D104014	S709513
F2 - F7	6314ZZ	D104014	S709513

Speed Reducers, RXC Sizes 91 & 95, (8X)
Reducer Code G_

PARTS LIST

301 Base
302 Bearing Cover
303 Snap Ring
304 Spring Pin
305 Magnetic Plug
306 Output Shaft
307 Output Shaft Bushing
308 Spacer
310 Bushing
311 Wheel
312 Wheel Spacer
314 Eccentric Bearing
315 Snap Ring
316 Roller Bearing
317 Carrier Pin
318 Holder
319 Internal Pin
320 Internal Pin Housing
321 ER Flange
324 Collar
325 Snap Ring
326 Nipple
327 Cap
329 Cover
331 Set Screw
332 Fan
333 Fan Cover
337 Bushing
338 Shaft
339 Snap Ring
370 Gasket
371 Gasket
372 Gasket
381 Output Flange
382 Spring Pin
383 Stud bolt
3A-E Bearings
3R-S Oil Seals

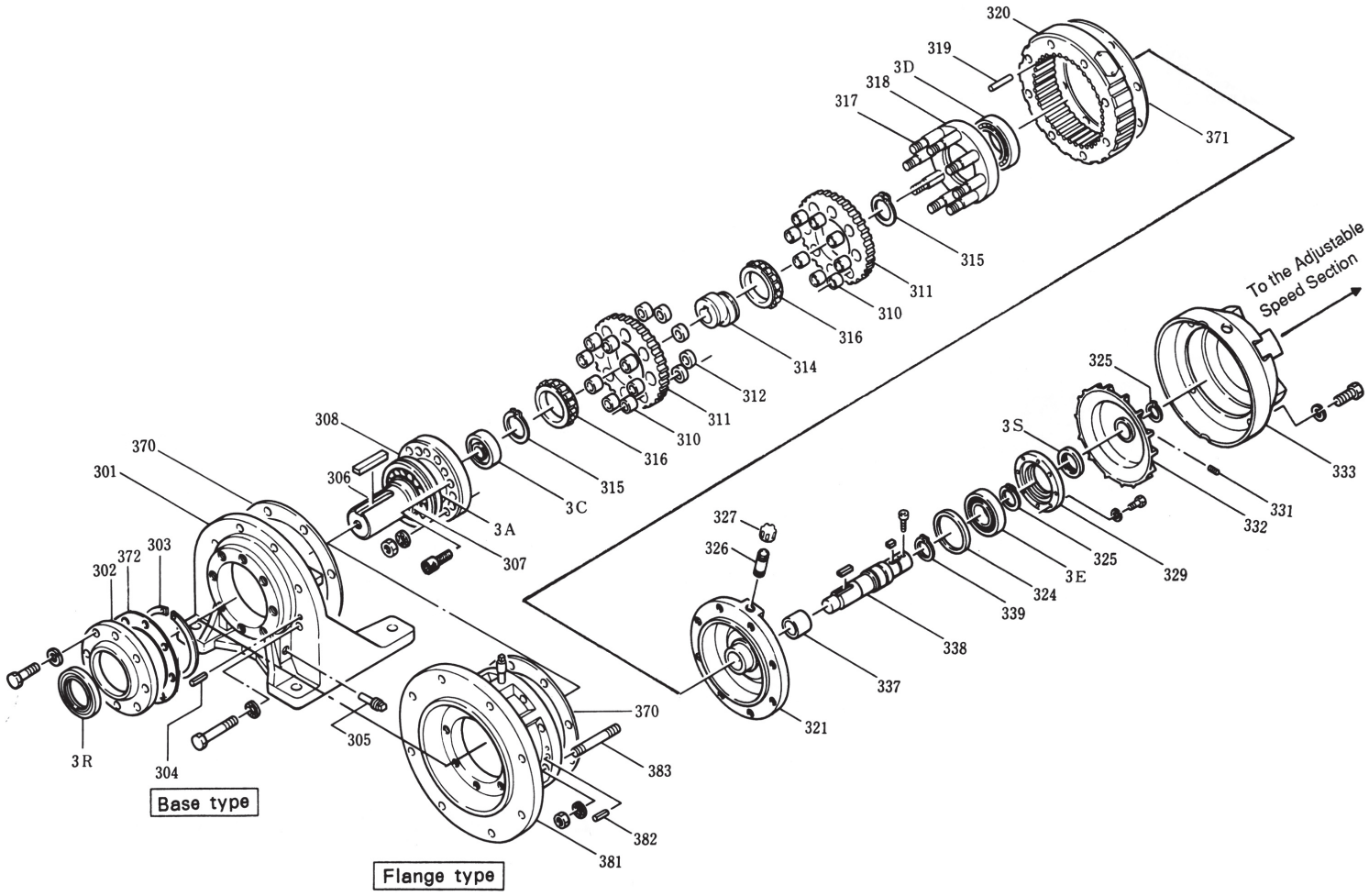

Reducer Code	Bearing 3A	Bearing 3C	Bearing 3D
G_	23126BNR	NJ311	6220
Reducer Code	**Bearing 3E**	**Oil Seal 3R**	**Oil Seal 3S**
G_	6218ZZ	D457514	S901513

Speed Controls, Sizes 02 - 75, (2X - 7.5X)

PARTS LIST

26	Gasket	901	Electric Control Cover	910	Gear Head
27	Handwheel Control Cover	903	Breather	911	Pilot Motor
28	Handwheel	904	Potentiometer	912	Dial
29	Dial	905	Cover	914	Magnetic Sensor
30	Breather	906	Clutch, Part A	915	O-Ring
102	Pipe	907	Clutch, Part B	916	Lock Nut
103	Elbow	908	Spring	917	Set Screw
105	Breather	909	Steel Ball	918	Gasket

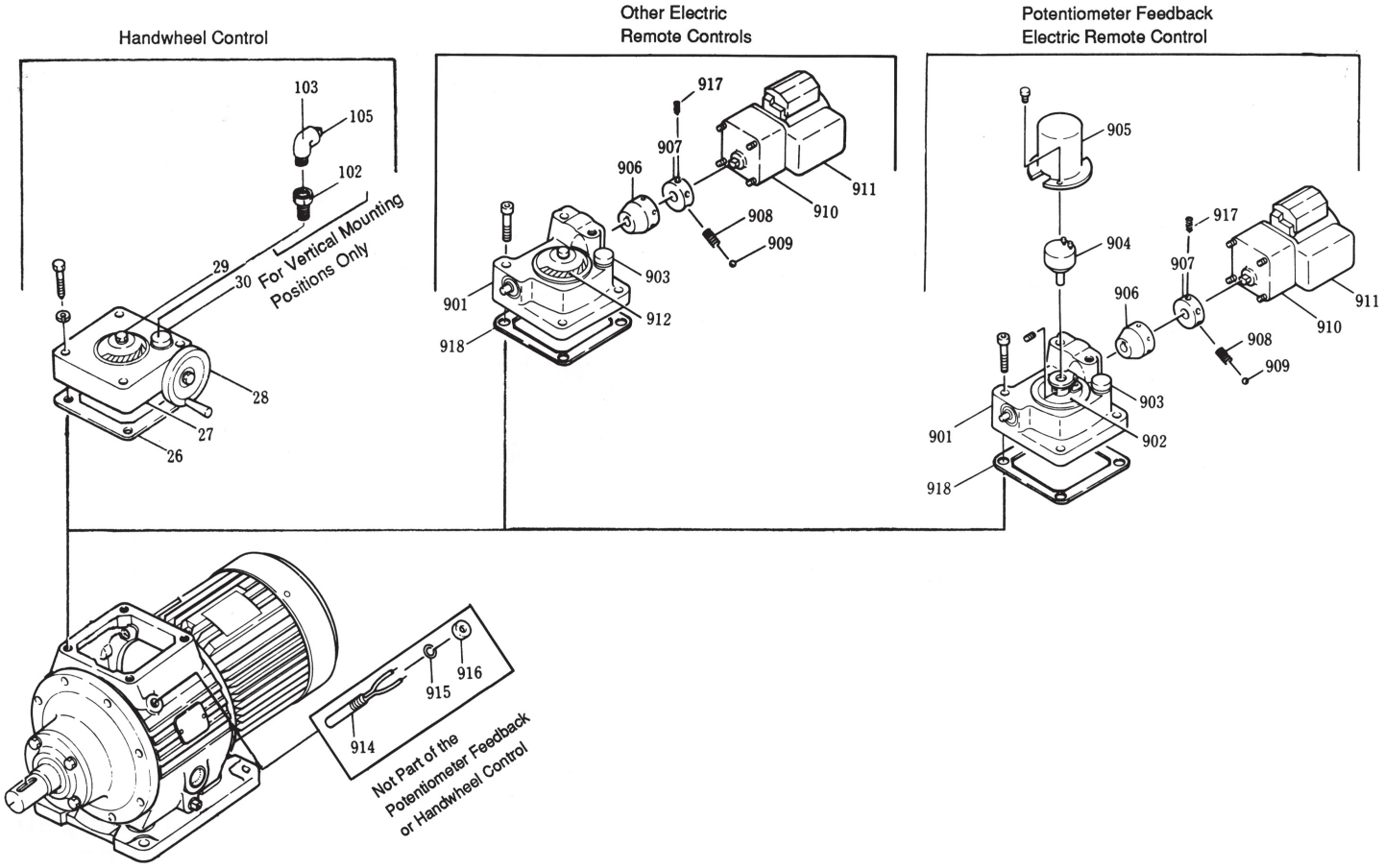

Speed Controls, Sizes 91 & 95, (8X)

PARTS LIST

26	Gasket	103	Elbow	909	Steel Ball
27	Handwheel Control Cover	105	Breather	910	Gear Head
28	Handwheel	901	Electric Control Cover	911	Pilot Motor
29	Dial	903	Breather	912	Dial
30	Breather	904	Potentiometer	914	Magnetic Sensor
31	Socket Head Bolt	905	Cover	915	O-Ring
32	Spring Washer	906	Clutch, Part A	916	Lock Nut
33	Lifting Eye	907	Clutch, Part B	917	Set Screw
102	Pipe	908	Spring	918	Gasket

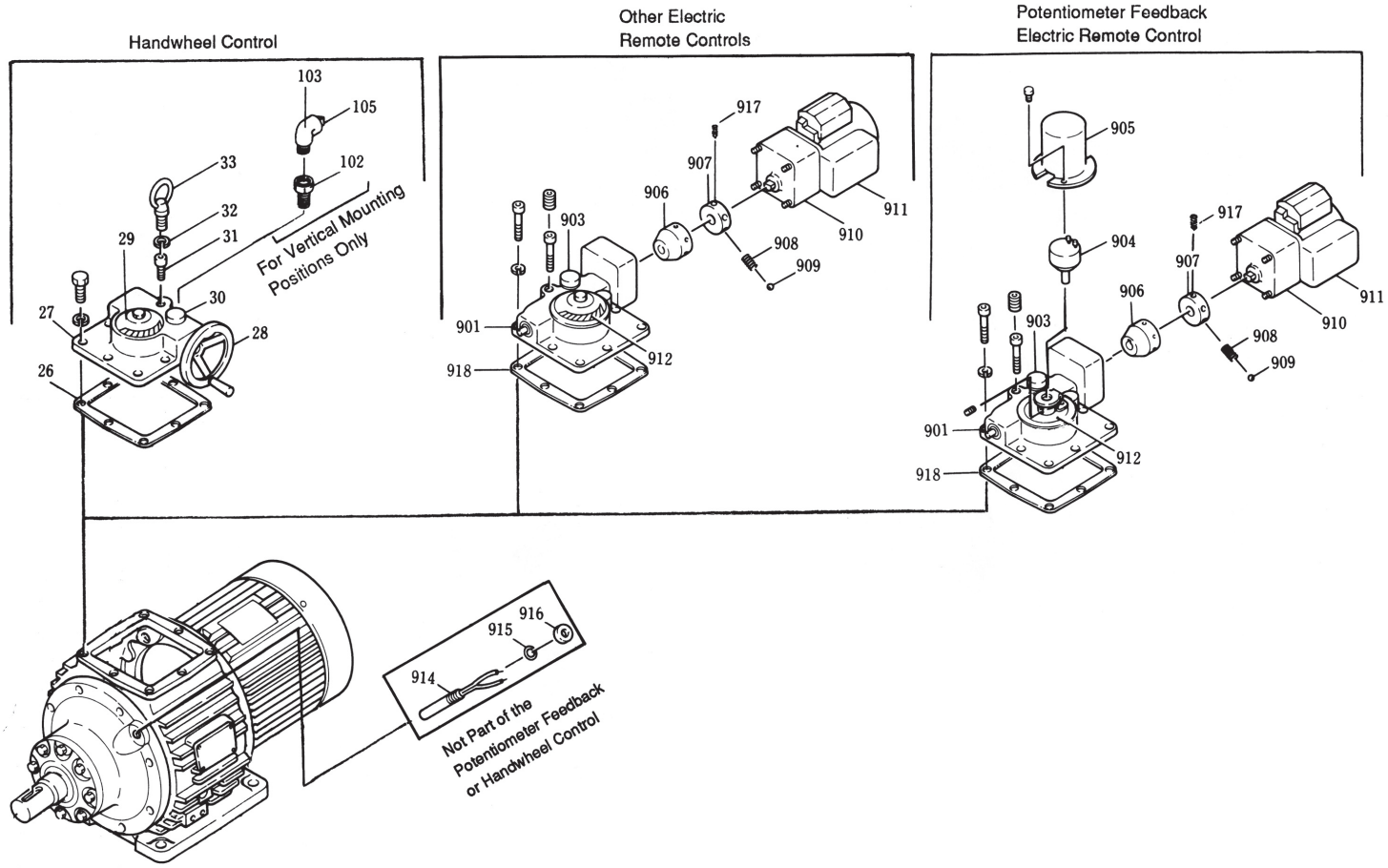

DAIDO (USA) CO., LTD.

DAIDO USA CO LTD • 175 Wall Street, Glendale Heights, IL 60139 • P: 800.842.1479 • daido@nidec-dtc.com • www.nidec-dtc.com