GYROMAX®

SPEED REDUCERS

Service, Parts and Instruction Manual

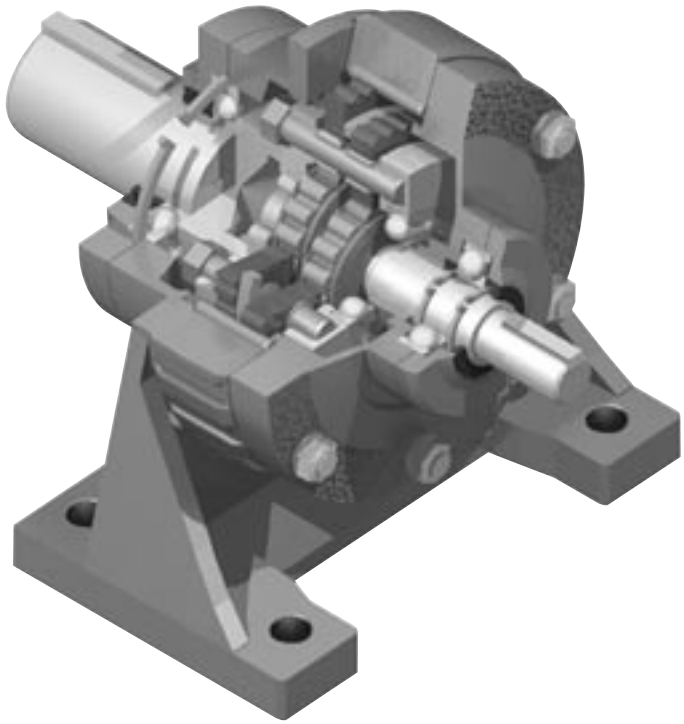

SHIMPO

A Nidec Group Company

SHIMPO DRIVES, INC. • Itasca, IL 60143 USA • Phone: (630) 924-7138 • (800) 842-1479 • Fax: (630) 924-7382
www.shimpodrives.com • info@shimpodrives.com

GYROMAX®

Table of Contents

Model Number Chart 3
Safety Precautions, Installation Information 4
Maintenance 5
Lubrication Specifications 6
Approximate Lubricant Quantities 7
Oil Fill, Level and Drain Locations 8
Exploded View Drawings & Parts Lists 9-46

A/2A190 - 2A197
- Output 10-11
- Reduction 12-13
- Input 14-15

B195/2B100 - 20H
- Output 16-17
- Reduction 18-19
- Input 20-21

C/2C110 - C335
- Output 22-23
- Reduction 24-25
- Input 26-27

D/2D130 - 365
- Output 28-29
- Reduction 30-31
- Input 32-33

E/2E160 - E485
- Output 34-35
- Reduction 36-37
- Input 38-39

F/2F080 - 195
- Output 40-41
- Reduction 42-43
- Input 44-45

2I205 - 2L235 / 2DI205 - 2EL235 46

Troubleshooting 47

Warranty

Seller warrants GYROMAX® Speed Reducers manufactured by Seller to be free from defects in materials and workmanship under normal use and proper maintenance for two years from the date of purchase. If within such period any product shall be proved to Seller's reasonable satisfaction to be defective, such product shall be repaired or replaced at our option. Seller's obligation and Buyer's exclusive remedy will be limited to such repair or replacement and shall be conditioned upon Seller receiving written notice of any alleged defect no later than ten (10) days after its discovery within the warranty period. Shipping terms for any repaired or replaced product will be FOB shipping point. If necessary, we reserve the right to inspect the product claimed to be defective at Buyer's location or place of installation. Travel time and expenses for any Seller service personnel provided to Buyer's premises to effect such repair or replacement will be at Buyer's expense. Seller reserves the right to satisfy our warranty obligation in full by reimbursing the Buyer for all payments made to Seller and Buyer shall thereupon return the product to Seller. *The foregoing warranties are the only warranties made by Seller with regard to the products, and Seller hereby disclaims all other warranties, express, statutory and implied, applicable to the products, including, but not limited to, all implied warranties of merchantability and fitness, and all express, statutory and implied warranties applicable to the parts which are not manufactured by Seller.* These warranties shall not be effective if the product has been subject to overload, misuse, negligence, or accident, or if the product has been repaired or altered outside of Seller's factory or authorized control in any respect which, in our judgment, adversely affects its condition or operation. Buyer shall establish, to our satisfaction, that the product has at all times, been properly assembled, installed, serviced, maintained, tested, operated and used in accordance with the current maintenance and operating instructions of Seller and has not been altered or modified in any manner without our prior written consent.

SHIMPO DRIVES, INC. • 1701 Glenlake Avenue Itasca, IL 60143 USA • Phone: (630) 924-7138 or (800) 842-1479 • Fax: (630) 924-7382
www.shimpodrives.com • info@shimpodrives.com

GYROMAX®

Model Number Chart

FRAME SIZE (from the selection tables)	**REDUCTION RATIO** (from the selection tables)	**INPUT TYPE**	**MOUNTING** Type	Position	**SPECIAL**

INPUT TYPE

Input Shaft
Input Shaft ..... SFT

C-Face for Motor Size
56C C56
143TC & 145TC C14
182TC & 184TC C18
213TC & 215TC C21
254TC & 256TC C25
284TC & 286TC C28
324TC & 326TC C32

Shovel Base for Motor Size
56S56
143T & 145T S14
182T & 184T S18
213T & 215T S21
254T & 256T S25
284T & 286T S28
324T & 326T S32
364T & 365T S36
404T & 405T S40

Coupling Adaptor for Motor Size
56C A56
143TC & 145TC A14
182TC & 184TC A18
213TC & 215TC A21
254TC & 256TC A25
284TC & 286TC A28
324TC & 326TC A32
364TC & 365TC A36
404TC & 405TC A40

Top Mount for Motor Size
56T56
143T & 145T T14
182T & 184T T18
213T & 215T T21
254T & 256T T25
284T & 286T T28
324T & 326T T32
364T & 365T T36
404T & 405T T40

C-Face and Motor provided by SHIMPO
1/4 HP Motor M25
1/2 HP Motor M50
3/4 HP Motor M75
1 HP Motor 1M0
1 1/2 HP Motor 1M5
2 HP Motor 2M0
3 HP Motor 3M0
5 HP Motor 5M0
7 1/2 HP Motor 7M5
10 HP Motor 10M
15 HP Motor 15M
20 HP Motor 20M
25 HP Motor 25M
30 HP Motor 30M
40 HP Motor 40M
50 HP Motor 50M
60 HP Motor 60M
75 HP Motor 75M

MOUNTING TYPE
Base (foot) ..... B
"F" Type Flange ..... F
"V" Type Flange V
Ring ..... R

MOUNTING POSITION
Horizontal ..... H
Vertical, output shaft down ... D
Vertical, output shaft up ..... U
Ceiling (base mount) C
Wall, feet left (base mount) L
Wall, feet right (base mount) .. R

Position L (viewed from output shaft)

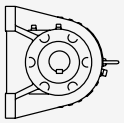

Position R (viewed from output shaft)

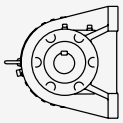

Double output shaft oil seals (oil filled units) ..... D
Expansion chamber breather (oil filled units) ..... E
USDA approved food grade lubricant ..... F
Oil level gauge ..... G
High temperature oil and high temperature acrylic seals ..... H
High temperature grease I
Oil lubrication in place of standard grease lubrication ..... J
Grease lubrication in place of standard oil lubrication ..... K
Low temperature oil L
Low temperature grease ..... M
Synthetic oil ..... S
Taper pins ..... T
Washdown breather (oil filled units) ..... U
Washdown modifications (a stainless steel sleeve under the output shaft seal, a V-ring deflector on the output shaft seal, and a washdown breather for oil filled units) ..... W
White epoxy paint X
Washdown modifications with white epoxy paint ..... Y
Reduced backlash ..... Z

Safety Precautions

WARNING: The keyways on all shafts are extremely sharp. Care should be exercised when working with all shafts.

CAUTION: Do not mount an oil-lubricated reducer in other than its intended position. Doing this can cause damage to the reducer. Contact Shimpo Drives Customer Service for information on mounting in a position other than the one indicated on the nameplate.

CAUTION: The reducer should be worked on only by a person who is familiar with mechanical assembly and disassembly techniques, including the proper handling of bearings. The reducer can be damaged by improper disassembly and assembly techniques.

Inspection

Unpack the reducer and check to see that it is identical to what is specified in the purchase order. Check the model number using the chart on the inside front cover of this manual. Inspect for shipping damage. Notify the shipping agent immediately if any damage is discovered.

Identification

GYROMAX® Speed Reducers can be provided in single, double or triple reduction configurations.

For single reduction, the second two characters of the model number indicates the reducer's size.

For double reduction, the second character of the model number indicates the size of the input stage. The third and fourth characters indicate the size of the output stage.

Installation

1. Install the unit in a clean, dry location with plenty of ventilation. A site in which rain or water is splashed around the unit should be avoided unless the reducer has been specifically modified for these conditions.
2. Proper ambient temperature is 32°F - 104°F. (0°C - 40°C). If the unit must operate outside of this temperature range, contact Shimpo Drives Customer Service.
3. Grease lubricated reducers have no restriction on their mounting position. Oil lubricated reducers must be mounted in the position that is specified in the model number of the reducer. The nameplate of the reducer indicates the type of lubrication used. The lubrication section of this manual also describes the standard type of lubricant that is used in each reducer.

CAUTION: Do not mount an oil-lubricated reducer in other than its intended position. Doing this can cause damage to the reducer. Contact Shimpo Drives Customer Service for information on mounting in a position other than the one indicated on the nameplate.

4. The reducer should be bolted down to a rigid, vibration-free base, such as a concrete foundation, sturdy cast iron beam, or steel frame work.
5. Gears, pulleys, or sprockets that are mounted to the input or output shafts should slide on easily. Pounding these components into place on the shafts can damage bearings and other reducer components, and should be avoided (Figure 1).
6. Mount any gears, pulleys, or sprockets as close to the housing of the reducer as is practical. Overhung loads must be checked prior to operating the unit. Contact Shimpo Drives Customer Service for assistance (Figure 2).
7. Secure the gear, pulley or sprocket to the shaft. If a key and set screw are used, the top of the key should have .004" to .008" (0.1 mm to 0.2 mm) of clearance.
8. Make sure that the overhung load on the shaft does not exceed the overhung load capacity of the unit.
9. All connected devices should be checked carefully for angular and parallel alignment.
10. For oil lubricated units, check to ensure that the oil is filled to the bottom of the oil level plug.
11. For oil lubricated reducers, if a separate breather was supplied, install it. If the breather was provided with a plug or cover, remove it. Be sure that the breather is not obstructed.

Figure 1

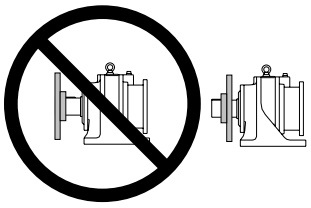

Figure 2

Direction of Rotation

GYROMAX® Speed Reducers can be operated in either direction of input rotation. The input and output shafts of single and triple reduction units will rotate in opposite directions. The input and output shafts of double reduction units will rotate in the same direction.

SHIMPO DRIVES, INC. • 1701 Glenlake Avenue Itasca, IL 60143 USA • Phone: (630) 924-7138 or (800) 842-1479 • Fax: (630) 924-7382
www.shimpodrives.com • info@shimpodrives.com

Maintenance

WARNING: The keyways on all shafts are extremely sharp. Care should be exercised when working with all shafts.

In addition to changing the lubricant periodically, the following checks should be performed on a regular basis.

Depending on the application, it may be desirable to make such checks on a weekly or monthly basis.

1. Check the case temperature of the reducer. A temperature of up to 90°F (50°C) above ambient is acceptable.
2. Check to see if the unit is being overloaded. This can often be done by measuring the drive motor's current.
3. Be sure that the reducer is not making an abnormal or irregular noise.
4. Check the reducer for abnormal vibration.
5. Look for lubricant leaks around the reducer.
6. Check all power transmitting components for misalignment and excessive wear.
7. Check for loose bolts. This includes the reducer body bolts and mounting bolts.

Repair Instructions

The following notes, in combination with the exploded view assembly drawings (pages 10-46), are provided to assist in the inspection and repair of the reducer.

CAUTION: The reducer should be worked on only by a person who is familiar with mechanical assembly and disassembly techniques, including the proper handling of bearings. The reducer can be damaged by improper disassembly and assembly techniques.

Disassembly Instructions

1. Disassembly always starts from the output side of the reducer.
2. Jack screw holes are provided between many sections to assist in the disassembly.
3. The output shaft bearings on reducers with case sizes A through C are held in place using two cone point set screws; these must be backed out in order to remove the output shaft assembly.
4. Reducer case sizes D and larger have a snap ring around the outside of the output shaft bearing. This snap ring must be removed in order to separate the output housing from the pin body.

Inspection Guidelines

1. Inspect all oil seals for damage. Also inspect the shaft surfaces on which they contact.
2. Inspect the oil or grease for signs of metal flakes.
3. Check all bearings to ensure that they rotate freely and do not have excessive free play.
4. Inspect the housing and all torque transmitting components for cracks and excessive wear.

Assembly Guidelines

1. Assembly always starts at the input side of the reducer.
2. An aerobic gasket compound or gaskets should be used between all mating housing parts.
3. Removable thread locking compound should be used on all bolts and nuts.
4. When reassembling a reducer (case sizes B and larger), ensure that the two eccentric roller bearings are installed in opposite directions. For reducer case size A, be sure that the cam on the balance weight is pointing in the opposite direction of the large lobe on the eccentric roller bearing. Failure to do this will result in excessive vibration when the reducer is returned to operation.
5. On case sizes B and larger, the two wheels must be installed exactly 180° opposite to each other. Match marks are provided on the wheels for this purpose. Failure to do this will result in a reducer that will not turn.
6. It is generally easier to install the wheel first and then the eccentric bearing. In this way, the rollers do not interfere with the hole in the wheel that forms the bearing's outer race.
7. On case sizes A through C, it is important to ensure that the bushings remain seated in the wheel as the output shaft assembly is installed. It is often useful to use some grease to hold the bushings in position on the wheels.
8. When case sizes A through C are reassembled, the cone point set screws should be alternately tightened to pull the output shaft in place. Each should be loosened a quarter of a turn after the output shaft is completely seated in the output housing.

GYROMAX®

Lubrication Specifications

GYROMAX® Speed Reducers are internally lubricated using either grease or oil. The table at the right describes the type of lubricant that is normally used with these reducers.

Because different lubricants may be used for extreme environmental conditions, check the nameplate of the reducer to determine the type of lubricant that is being used. Lubrication quantities listed are approximate.

Follow the instructions below when adding lubricant to the reducer.

Grease lubricated reducers should be disassembled, cleaned and filled with new grease every 5 years or 20,000 hours operation, whichever comes first. Under extreme environmental conditions, the grease may need to be replaced more frequently. The grease should be packed into the reducer in a similar manner to the way that an anti-friction bearing is re-greased. Approximately 20% air space should remain.

Oil lubricated units should receive an oil change after the first 500 hours of operation. After this initial oil change, the oil should be changed after every 5,000 hours of operation or annually, whichever comes first. Under extreme environmental conditions, the oil may need to be replaced more frequently. To drain the oil, remove the oil breather plug and the oil drain plug. To refill the reducer, install the drain plug and remove the level plug. Add oil through the oil fill opening until the oil overflows from the level plug opening. Replace the level plug and the breather.

Single Reduction

FRAME SIZE	ALL MOUNTING POSITIONS
A190/A195 2A190 - 2A197 B195 - B20H 2B100 - 2B20H C110 - C335 2C110 - 2C225	NLGI # 0 Grease
D135 - D365 2D130 - 2D365 E165 - E485 2E160 - 2E375 F080 - F195 2F080 - 2F195 2I205 2J215 2K225 2L235	ISO VG 220 Oil (AGMA 5 EP) *ISO VG 320 Oil

Double Reduction

FRAME SIZE	HORIZONTAL	VERTICAL OUTPUT SHAFT DOWN	VERTICAL OUTPUT SHAFT UP
	INPUT AND OUTPUT STAGES		
AB/2AB	NLGI # 0 Grease	NLGI # 0 Grease	NLGI # 0 Grease
AC/2AC			
AD/2AD	ISO VG 220 Oil	NLGI # 0 Grease	ISO VG 220 Oil
BD/2BD			
BE/2BE			
CE/2CE			
CF/2CF			
DF/2DF		ISO VG 220 Oil	
2DI			
2DJ			
2EJ			
2DK			
2FK			
2EL			

Lubrication Specifications

LUBRICANT TYPE	GENERIC SPECIFICATION	BRAND REFERENCE		
		SHELL	MOBIL	EXXON
GREASE	NLGI #0 GREASE	Darina EP No.0	-	-
OIL	ISO VG 220 GEAR OIL	Omala Oil 220	Mobil Gear 630	Spartan EP 220
OIL	ISO VG 320 GEAR OIL	Omala Oil 320	Mobil Gear 632	Spartan EP 320

The lubricants listed are for normal industrial service, and other oils may be specified for severe operating conditions. Refer to the nameplate of the reducer for specific lubrication type.

**For high temperature applications, ISO VG 320 (AGMA 6 EP) is available upon request.*

SHIMPO DRIVES, INC. • 1701 Glenlake Avenue Itasca, IL 60143 USA • Phone: (630) 924-7138 or (800) 842-1479 • Fax: (630) 924-7382
www.shimpodrives.com • info@shimpodrives.com

Approximate Lubricant Quantities

FRAME SIZE	MOUNTING POSITION	
	HORIZONTAL	VERTICAL
A190/A195 2A190 - 2A197	5 oz	
B195 - B20H 2B100 - 2B20H	7 oz	
C110 - C335 2C110 - 2C225	14 oz	
D135 - D365 2D130 - 2D365	0.25 gal	0.40 gal
E165 - E485 2E160 - 2E375	0.50 gal	0.65 gal
F080 - F195 2F080 - 2F195	0.85 gal	1.15 gal
2I205	1.45 gal	1.50 gal *
2J215	2.24 gal	2.00 gal *
2K225	2.63 gal	2.63 gal *
2L235	3.95 gal	3.16 gal *

** Contact SHIMPO Drives Customer Service for Vertical Up Mounting*

FRAME SIZE	MOUNTING POSITION		
	HORIZONTAL	VERTICAL OUTPUT SHAFT DOWN	VERTICAL OUTPUT SHAFT UP
AB/2AB	10 oz		
AC/2AC	15 oz		
AD/2AD	0.31 gal	29 oz	0.45 gal
BD/2BD	0.32 gal	31 oz	0.51 gal
BE/2BE	0.58 gal	42 oz	0.90 gal
CE/2CE	0.63 gal	49 oz	0.98 gal
CF/2CF	1.00 gal	72 oz	1.53 gal
DF/2DF	1.08 gal	2.06 gal	2.06 gal
2DI	1.58 gal	2.90 gal	C/F
2DJ	2.63 gal	3.68 gal	
2EJ	2.63 gal	3.68 gal	
2DK	2.90 gal	4.74 gal	
2FK	2.90 gal	4.74 gal	
2EL	4.47 gal	6.05 gal	

Grease quantites are given in oz. Oil quantites are given in gal.
C/F: Contact SHIMPO Drives Customer Service

GYROMAX®

Oil Fill, Level and Drain Locations

	Base Mount	Flange Mount	Ring Mount
Single Reduction	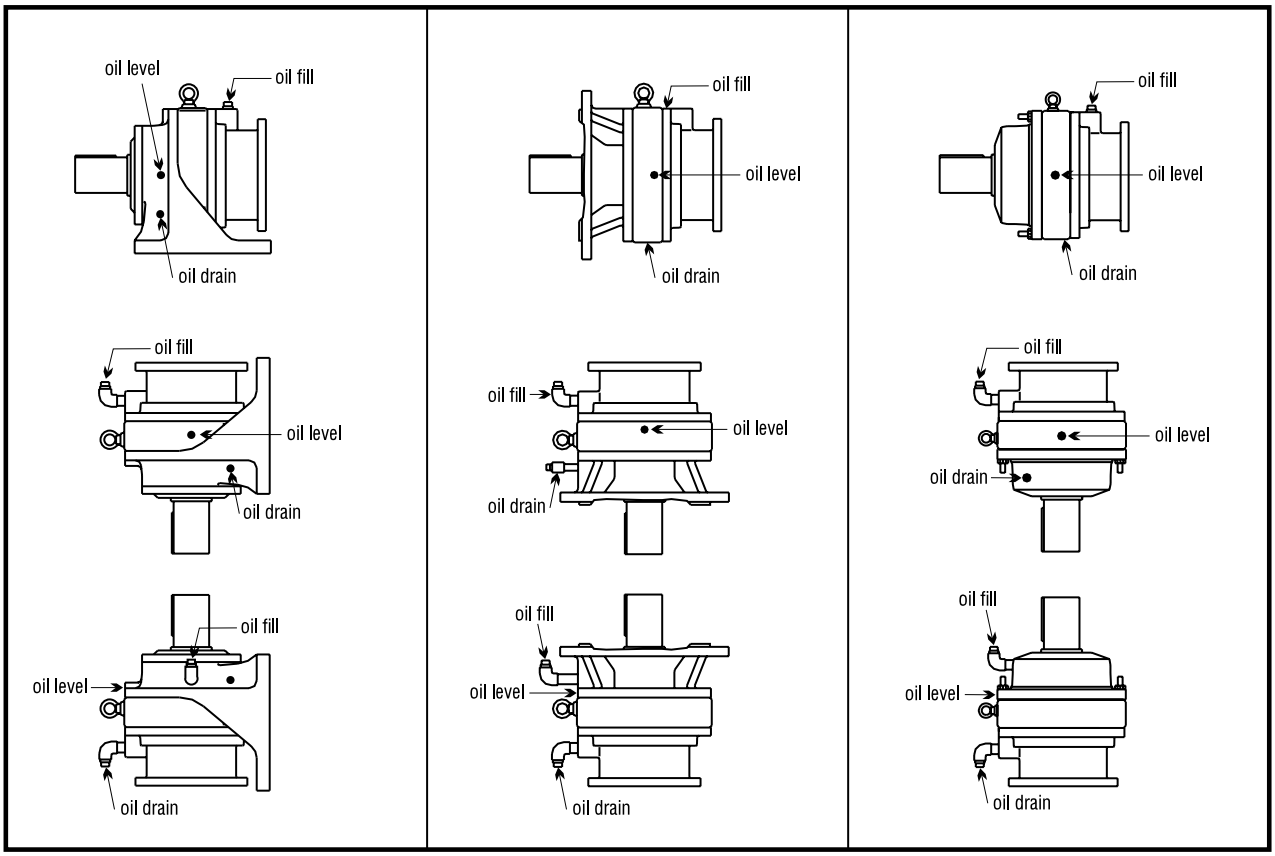		
Double Reduction	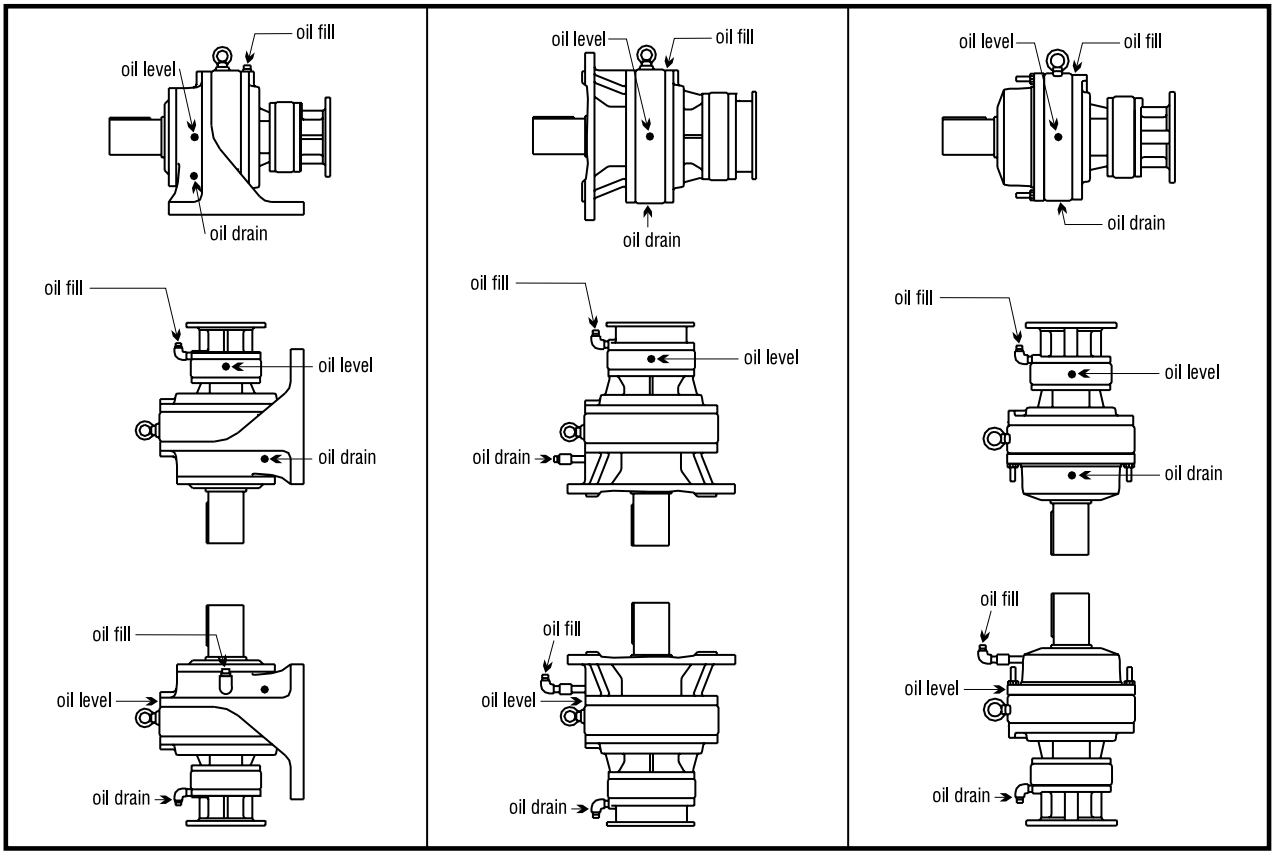		

SHIMPO DRIVES, INC. • 1701 Glenlake Avenue Itasca, IL 60143 USA • Phone: (630) 924-7138 or (800) 842-1479 • Fax: (630) 924-7382
www.shimpodrives.com • info@shimpodrives.com

Exploded View Drawings & Parts Lists

Single Reduction Case Sizes

FRAME SIZE	CASE SIZE
A190/A195 2A190 - 2A197	A
B195 - B20H 2B100 - 2B20H	B
C110 - C335 2C110 - 2C225	C
D135 - D365 2D130 - 2D365	D
E165 - E485 2E160 - 2E375	E
F080 - F195 2F080 - 2F195	F
2I205	I
2J215	J
2K225	K
2L235	L

The following pages (10-46) provide exploded view drawings and parts lists for GYROMAX® Speed Reducers.

These are grouped by case size. Single reduction reducers use one case size. Double reduction reducers are built from two case sizes.

A coupler and a counter shaft, along with other support parts, are used to connect the two case sizes together.

The connection parts are shown with the smaller, input case size reducer. The charts below relate the model number of the complete reducer to the case sizes used.

Generic parts, such as oil seals, snap rings, keys and many bearings, are described in enough detail to allow you to purchase them locally.

Examples of the numbering system for snap rings and oil seals are given in the table below. Other parts are self-explanatory.

When ordering parts, please provide the following information:

Double Reduction Case Sizes

FRAME SIZE	INPUT CASE SIZE	OUTPUT CASE SIZE
AB/2AB	A	B
AC/2AC	A	C
AD/2AD	A	D
BD/2BD	B	D
BE/2BE	B	E
CE/2CE	C	E
CF/2CF	C	F
DF/2DF	D	F
2DI	D	I
2DJ	D	J
2EJ	E	J
2DK	D	K
2FK	F	K
2EL	E	L

- **Complete model number of the reducer**
- **Serial number of the reducer, if available**
- **Item number of the part**
- **Description of the part**

With the above information, we will be able to ensure that you are ordering the correct parts for your reducer.

If you find that it is necessary to return a part, contact Shimpo Drives Customer Service for complete shipping instructions and a return materials authorization number.

NOTE: We will not accept returned parts or units without a return materials authorization number.

Generic Part Number Examples

S-50	External snap ring, 50 mm in diameter
R-47	Internal snap ring, 47 mm in diameter
D456008	Double lip oil seal, for a 45 mm shaft and 60 mm outside diameter, 8 mm thick
S254008	Single lip oil seal, for a 25 mm shaft and 40 mm outside diameter, 8 mm thick

The above lubricants are for normal industrial service.
Other oils may be specified for severe operating conditions.
Refer to the nameplate of the reducer for specific lubrication type.

** For high temperature applications, ISO VG 320 (AGMA 6 EP) is available upon request.*

GYROMAX®

Frame Sizes A/2A190-2A197 Output Section Parts List

ITEM	QTY	PART #	DESCRIPTION	COMMENTS
1	1	BXEA1100810	Base EX-AB1	
5	2	BRXA6060180	Gasket at Pin Housing, A, B, NB	
6	1	KNZY0100850	Output Shaft Assy. A21	6:1
6	1	KNZY1100840	Output Shaft Assy. A1	11:1
6	1	KNZY2100840	Output Shaft Assy. A2	17:1
6	1	KNZY4100840	Output Shaft Assy. A3	29,35,47,59,71:1
6	1	KNZY8100840	Output Shaft Assy. A22	8,13,15,21,25,43,51,87:1
9	1	BERB1200470	Output Bushing NB1	
15	1	ROSPA456209	Oil Seal D456209	
17	1	56000307	Key 1/4x1/4x1.18	Output Shaft
18	6	RSRAC008070	Hex. Head Screw M8x70, 11T	C-Face Input
18	6	RSRAC008075	Hex. Head Screw M8x75, 11T	Shaft Input
19	2	RSTBG008014	Set Screw M8x14, Sharp	
20	6	RWLBA000008	Spring Washer Disk, PS, M8	
22	1	RBBCA006209	Ball Bearing 6209ZZ	
23	1	RBBCA006307	Ball Bearing 6307ZZ	
225	6	RSNAA000008	Hex. Nut, M8, Type 1	
301	1	BERG1231160	Output Flange NB1	"F" Version
301	1	BXEA1131160	Output Flange EX-VAB1	"V" Version
307	6	BERA1231181	Stud Bolt M8x78	
501	1	KXEB0001120	Counter Shaft Assy. AB1	AB, 6x15-87:1
501	1	KXEB0001130	Counter Shaft Assy. AB2	AB, 8,13,15,21,25,43,51,87x13-87:1
501	1	KERB0001210	Counter Shaft Assy. NAB1	AB, 11x11:1
501	1	KERB0001220	Counter Shaft Assy. NAB2	AB, 11x13-87:1
501	1	KERB0001230	Counter Shaft Assy. NAB3	AB, 17x17-87:1
501	1	KERB0001240	Counter Shaft Assy. NAB4	AB, 29,35,47,59,71x29-87:1
501	1	KXEB0001320	Counter Shaft Assy. AC1	AC, 6x15-87:1
501	1	KXEB0001330	Counter Shaft Assy. AC2	AC, 8,13,15,21,25,43,51,87x13-87:1
501	1	KERB0001310	Counter Shaft Assy. NAC1	AC, 11x11:1
501	1	KERB0001320	Counter Shaft Assy. NAC2	AC, 11x13-87:1
501	1	KERB0001330	Counter Shaft Assy. NAC3	AC, 17x17-87:1
501	1	KERB0001340	Counter Shaft Assy. NAC4	AC, 29,35,47,59,71x29-87:1
501	1	KXEB0001420	Counter Shaft Assy. AD1	AD, 6x15-87:1
501	1	KXEB0001430	Counter Shaft Assy. AD2	AD, 8,13,15,21,25,43,51,87x13-87:1
501	1	KERB0001410	Counter Shaft Assy. NAD1	AD, 11x11
501	1	KERB0001420	Counter Shaft Assy. NAD2	AD, 11x13-87:1
501	1	KERB0001430	Counter Shaft Assy. NAD3	AD, 17x17-87:1
501	1	KERB0001440	Counter Shaft Assy. NAD4	AD, 29,35,47,59,71x29-87:1
501	1	KXEB0001420-VD	Counter Shaft Assy. AD1-VD	AD, 6x15-87:1 VD
501	1	KXEB0001430-VD	Counter Shaft Assy. AD2-VD	AD, 8,13,15,21,25,43,51,87x13-87:1 VD
501	1	KERB0001450	Counter Shaft Assy. NAD5	AD, 11x11 VD
501	1	KERB0001460	Counter Shaft Assy. NAD6	AD, 11x13-87:1 VD
501	1	KERB0001470	Counter Shaft Assy. NAD7	AD, 17x17-87:1 VD
501	1	KERB0001480	Counter Shaft Assy. NAD8	AD, 29,35,47,59,71x29-87:1 VD
503	1	BXEB0911010	Coupler EX-AB1	AB
503	1	BXEB0913010	Coupler EX-AC1	AC
503	1	BXEB0914010	Coupler EX-AD1	AD
506	1	BERB0102040	Counter Shaft Bushing NC1	AC Second Stage 11:1
506	1	BERB0202040	Counter Shaft Bushing NC2	AC Second Stage except 11:1
506	1	BERB0103040	Counter Shaft Bushing ND1	AD Second Stage 11:1
506	1	BERB0203040	Counter Shaft Bushing ND2	AD Second Stage except 11:1

SHIMPO DRIVES, INC. • 1701 Glenlake Avenue Itasca, IL 60143 USA • Phone: (630) 924-7138 or (800) 842-1479 • Fax: (630) 924-7382
www.shimpodrives.com • info@shimpodrives.com

Frame Sizes A/2A190-2A197 Output Section Parts List

ITEM	QTY	PART #	DESCRIPTION	COMMENTS
508	1	BERB0101060	Shim	Vertical Down
509	1	RBBEA006010	Ball Bearing 6010DD	AB, AC
509	1	RBBAA006010	Ball Bearing 6010	AD except Vertical Down
509	1	RBBEA006010	Ball Bearing 6010DD	AD Vertical Down
512	1	RLKAA004024	Key 4x4x24 KM1	AB, Second Stage 11:1
512	1	RLKAA005032	Key 5x5x32 KM2	AB, Second Stage except 11:1
512	1	RLKAA005042	Key 5x5x42	AC, Second Stage 11:1
512	1	RLKAA007040	Key 7x7x40	AC, Second Stage except 11:1
512	1	RLKAA007040	Key 7x7x40	AD, Second Stage 11:1
512	1	RLKAA010038	Key 10x8x38 KM7	AD, Second Stage except 11:1
701	1	C/F	Ring Output Housing NA1	
708	4	BERA1100080	Stud Bolt M8x71	C-Face Input
708	4	RSRAC008065	Hex. Head Cap Screw, M8x65, 11T	Shaft input
712	2	RSRBA008055	Hex. Head Cap Screw, M8x55	

Frame Sizes A/2A190-2A197 Output Section:

Exploded View

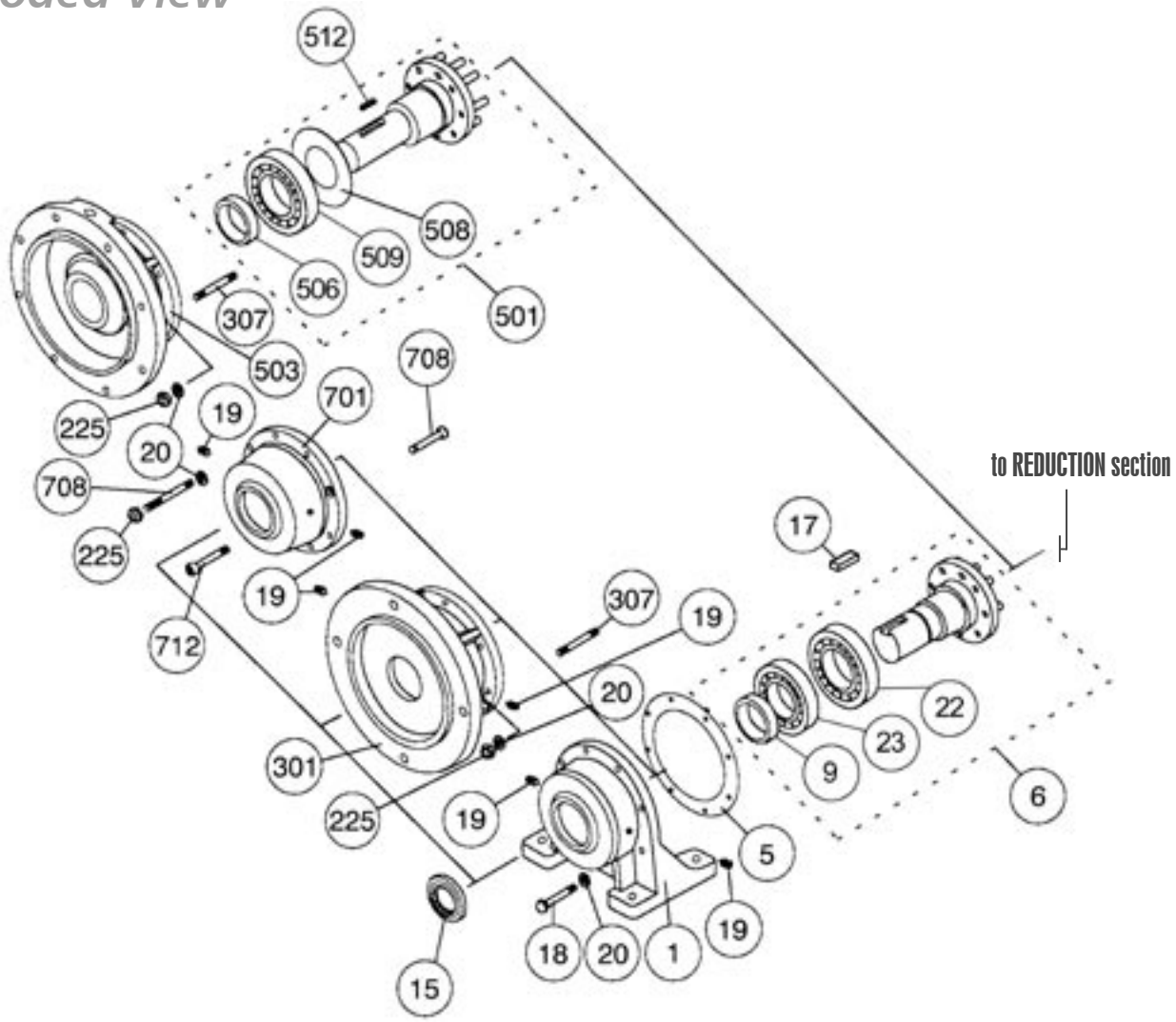

GYROMAX®

Frame Sizes A/2A190-2A197 Reduction Section Parts List

ITEM	QTY	PART #	DESCRIPTION	COMMENTS
2	1	BXEG0100020	Pin Housing EX-6A	6:1
2	1	BXEG1100020	Pin Housing EX 8,11,17,35A	8:1
2	1	BERJ1100020	Pin Housing NA1	11,17,35,71:1
2	1	BXEG3100020	Pin Housing EX-13A	13:1
2	1	BXEG4100020	Pin Housing EX-15A	15:1
2	1	BXEG6100020	Pin Housing EX-21,43A	21,43:1
2	1	BXEG7100020	Pin Housing EX-25,51A	25,51:1
2	1	BERJ3100020	Pin Housing NA2	29,59:1
2	1	BERJ5100020	Pin Housing NA3	47:1
2	1	BXEGF100020	Pin Housing EX-87A	87:1
4	1	BERA1100061	Balance Weight NA1	6,11:1
4	1	BERA2100062	Balance Weight NA2	8,13,15,17,21,25,29,35:1
4	1	BERA4100060	Balance Weight NA3	43,47,59,71,87:1
7	1	BXEB0100220	Wheel EX-6AB	6:1
7	1	BXEB1100220	Wheel EX-8AB	8:1
7	1	BERB1200220	Wheel NB1	11:1
7	1	BXEB3100220	Wheel EX-13AB	13:1
7	1	BXEB4100220	Wheel EX-15AB	15:1
7	1	BERB2200220	Wheel NB2	17:1
7	1	BXEB6100220	Wheel EX-21AB	21:1
7	1	BXEB7100220	Wheel EX-25AB	25:1
7	1	BERA4100221	Wheel A3	29:1
7	1	BERA3100223	Wheel A4	35:1
7	1	BXEBA100220	Wheel EX-43AB	43:1
7	1	BERA5100223	Wheel A5	47:1
7	1	BXEBC100220	Wheel EX-51AB	51:1
7	1	BERA6100221	Wheel A6	59:1
7	1	BERA7100221	Wheel A7	71:1
7	1	BXEBF100220	Wheel EX-87AB	87:1
8	8*	BERB1200360	Bushing NB1	6,8,13,15,21,25,43,51,87:1
8	8*	BERA1100361	Bushing A1	11,17,29,35,47,59,71:1
10	**	BERA1100381	Internal Pin A1	6,11,17,29,35,47,59,71:1
10	**	BXEB1100380	Internal Pin EX-8-59A	8,13,15,21,25,43,51:1
10	44*	BXEBF100380	Internal Pin EX-87A	87:1
11	28*	BXEA0100440	Internal Pin Roller EX-6AB	6:1
12	1	BERA1100400	Eccentric Bearing A1	6,11:1
12	1	BERA2100400	Eccentric Bearing A2	8,13,17:1
12	1	BXEB4100600	Eccentric Bearing EX-15,17AB	15:1
12	1	BXEB6100600	Eccentric Bearing EX-21AB	21:1
12	1	BERA3100400	Eccentric Bearing A4	25,35:1
12	1	BERA4100400	Eccentric Bearing A3	29:1
12	1	BXEBA100600	Eccentric Bearing EX-43-47AB	43:1
12	1	BERA5100400	Eccentric Bearing A5	47:1
12	1	BERA7100400	Eccentric Bearing A7	51,71:1
12	1	BERA6100400	Eccentric Bearing A6	59:1
12	1	BXEBE100600	Eccentric Bearing EX-71,87AB	87:1
104	1	BERA1100430	Distance Collar NB1	6,11:1
104	1	BERA0201030	Distance Collar NB2	except 6,11:1
105	1	RBNGA121512	Inner Race 121512 A1	6,11:1
106	1	RBRCA153212	Roller Bearing NF153212	

** indicates that these parts must be purchased in sets of this size | ** indicates that the number of items per reducer varies*

SHIMPO DRIVES, INC. • 1701 Glenlake Avenue Itasca, IL 60143 USA • Phone: (630) 924-7138 or (800) 842-1479 • Fax: (630) 924-7382
www.shimpodrives.com • info@shimpodrives.com

Frame Sizes A/2A190-2A197 Reduction Section:

Exploded View

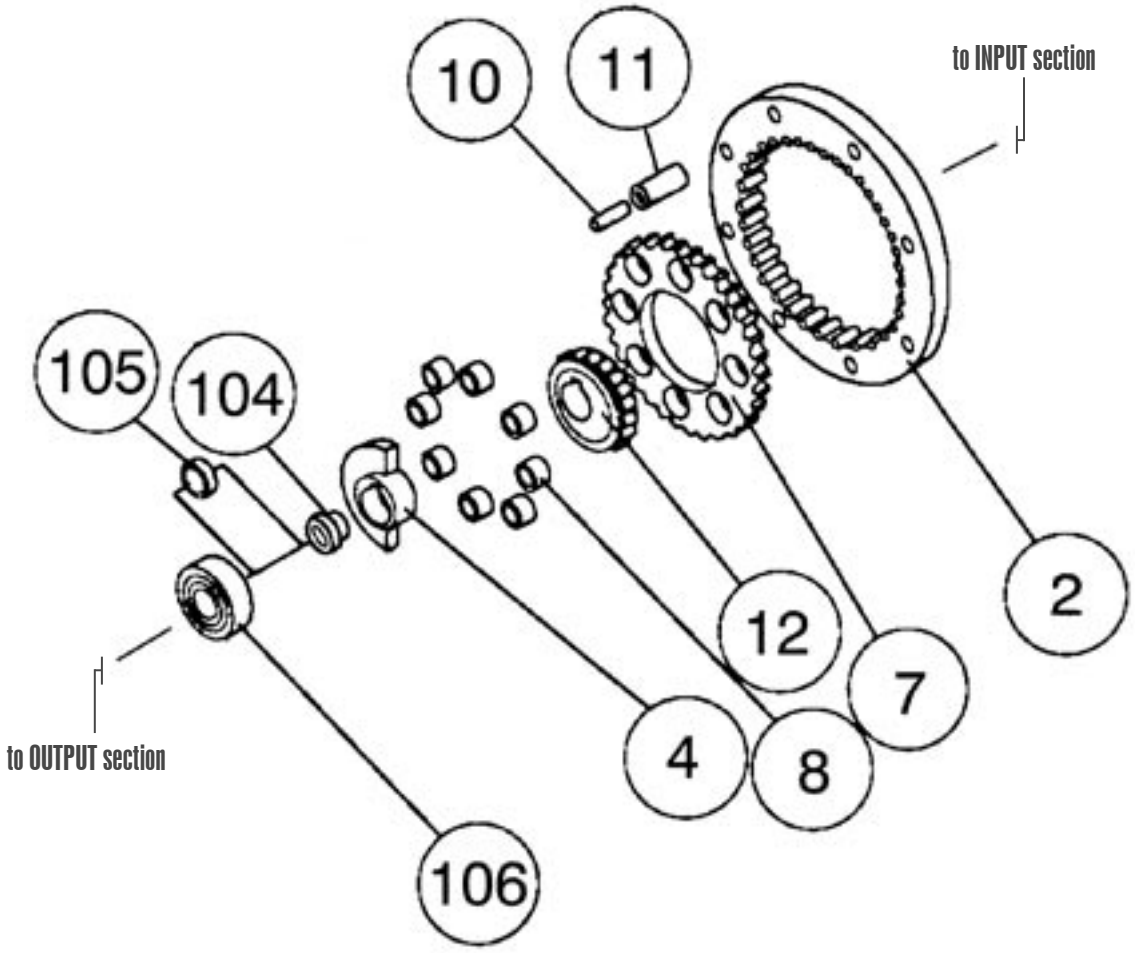

GYROMAX®

Frame Sizes A/2A190-2A197 Input Section Parts List

ITEM	QTY	PART #	DESCRIPTION	COMMENTS
5	2	BRXA6060180	Gasket at Pin Housing, A, B, NB	
16	1	RLKAA004024	Key KM1 4x4x24	6,11:1
16	1	RLKAA005032	Key KM2 5x5x32	except 6,11:1
20	6	RWLBA000008	Spring Washer Disk, PS, M8	
21	1	RSPBB000108	Hex. Headless Plug PT1/8	
51	1	RBBCA006007	Ball Bearing 6007ZZ	
53	2	RLSSA000035	Snap Ring S-35 External	
63	1	RBBCA006204	Ball Bearing 6024ZZ	
66	1	RLSAA000020	Snap Ring S-20 External	
101	1	BXKG0107020	Motor Flange A2 56C/140TC	
102	1	KNZY1107030	Motor Shaft A5 w/Brg	6,11:1 56C
102	1	KNZY2107030	Motor Shaft A6 w/Brg	56C except 6,11:1
102	1	KNZY1115030	Motor Shaft B1 w/Brg	6,11:1 140TC
102	1	KNZY2115030	Motor Shaft B2 w/Brg	140TC except 6,11:1
103	1	BERA0101040	Counter Shaft Bushing NB1	6,11:1
103	1	BERA0201030	Counter Shaft Bushing NB2	C-Face Input except 6,11:1
107	2	SDSAD052062	Shim	
110	1	RLSRA000062	Snap Ring R-62 Internal	
111	1	ROSAA304007	Oil Seal S304007	
201	1	BXEA1100110	Input Bracket A1	
206	1	KNZY1100310	Input Shaft A1 w/Brg	6,11:1
206	1	KNZY2100310	Input Shaft A2 w/Brg	except 6,11:1
210	1	BNZY1100460	Input Shaft Bushing	Shaft Input except 6,11:1
216	1	RLSRA000047	Snap Ring R-47 Internal	
218	1	ROSPA253507	Oil Seal D253507	
219	1	56000303	Key 3/8x3/8x0.98	Input Shaft
225	6	RSNAA000008	Hex. Nut, M8, Type 1	

SHIMPO DRIVES, INC. • 1701 Glenlake Avenue Itasca, IL 60143 USA • Phone: (630) 924-7138 or (800) 842-1479 • Fax: (630) 924-7382
www.shimpodrives.com • info@shimpodrives.com

Frame Sizes A/2A190-2A197 Input Section:

Exploded View

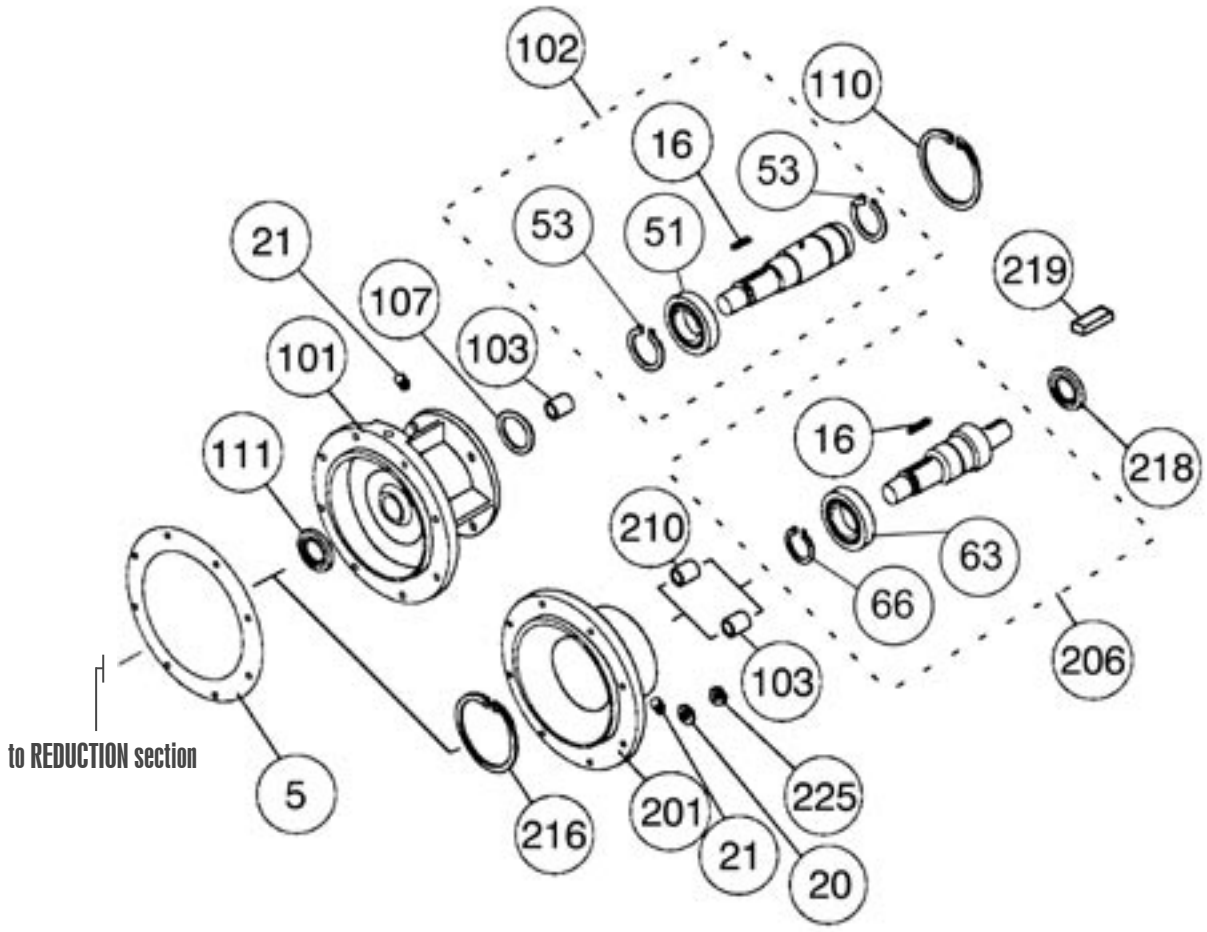

GYROMAX®

Frame Sizes B195/2B100-20H Output Section Parts List

ITEM	QTY	PART #	DESCRIPTION	COMMENTS
1	1	BXEA1100810	Base EX-AB1	B195-105/2B100,105
1	1	BXEA1200820	Base EX-B2	B/2B20H
4	2	BRXA6060180	Gasket at Pin Housing, A, B, NB	
5	1	KNZY0200850	Output Shaft Assy. B21	6:1
5	1	KNZY1200840	Output Shaft Assy. B1	11:1
5	1	KNZY2200840	Output Shaft Assy. B2	17:1
5	1	KNZY4200840	Output Shaft Assy. B3	except 6,11,17:1
9	1	BERB1200470	Output Bushing NB1	
15	1	ROSPA456209	Oil Seal D456209	
17	1	56000307	Key 1/4x1/4x1.18	Output Shaft
18	6	RSRAC008070	Hex. Head Screw M8x70, 11T	C-Face Input
18	6	RSRAC008075	Hex. Head Screw M8x75, 11T	Shaft Input
19	2	RSTBG008014	Set Screw M8x14, Sharp	
20	6	RWLBA000008	Spring Washer Disk, PS, M8	
22	1	RBBCA006209	Ball Bearing 6209ZZ	
23	1	RBBCA006307	Ball Bearing 6307ZZ	
225	6	RSNAA000008	Hex. Nut, M8, Type 1	
301	1	BERG1231160	Output Flange NB1	"F" Version
301	1	BXEA1131160	Output Flange EX-VAB1	"V" Version
307	6	BERA1231181	Stud Bolt M8x78	
501	1	KXEB0002420	Counter Shaft Assy. BD1	BD, 6x15-87:1
501	1	KERB0002410	Counter Shaft Assy. NBD1	BD, 11x11:1
501	1	KERB0002420	Counter Shaft Assy. NBD2	BD, 11x13-87:1
501	1	KERB0002430	Counter Shaft Assy. NBD3	BD, 17x17-87:1
501	1	KERB0002440	Counter Shaft Assy. NBD4	BD, 8,13,15,21-87x13-87:1
501	1	KXEB0002420-VD	Counter Shaft Assy. BD1-VD	BD, 6x15-87:1 VD
501	1	KERB0002450	Counter Shaft Assy. NBD5	BD, 11x11:1 VD
501	1	KERB0002460	Counter Shaft Assy. NBD6	BD, 11x13-87:1 VD
501	1	KERB0002470	Counter Shaft Assy. NBD7	BD, 17x17-87:1 VD
501	1	KERB0002480	Counter Shaft Assy. NBD8	BD, 8,13,15,21-87x13-87:1 VD
501	1	KXEB0002520	Counter Shaft Assy. BE1	BE, 6x15-87:1
501	1	KERB0002510	Counter Shaft Assy. NBE1	BE, 11x11:1
501	1	KERB0002520	Counter Shaft Assy. NBE2	BE, 11x13-87:1
501	1	KERB0002530	Counter Shaft Assy. NBE3	BE, 17x17-87:1
501	1	KERB0002540	Counter Shaft Assy. NBE4	BE, 8,13,15,21-87x13-87:1
501	1	KXEB0002520-VD	Counter Shaft Assy. BE1-VD	BE, 6x15-87:1 VD
501	1	KERB0002550	Counter Shaft Assy. NBE5	BE, 11x11:1 VD
501	1	KERB0002560	Counter Shaft Assy. NBE6	BE, 11x13-87:1 VD
501	1	KERB0002570	Counter Shaft Assy. NBE7	BE, 17x17-87:1 VD
501	1	KERB0002580	Counter Shaft Assy. NBE8	BE, 8,13,15,21-87x13-87:1 VD
503	1	BEXB0914010	Coupler EX-AD1	BD
503	1	BXEB0915010	Coupler EX-BE1	BE
506	1	BERB0103040	Counter Shaft Bushing ND1	BD Second Stage 11:1
506	1	BERB0203040	Counter Shaft Bushing ND2	BD Second Stage except 11:1
506	1	BERB0107040	Counter Shaft Bushing NE1	Second Stage 11:1
506	1	BERB0207040	Counter Shaft Bushing NE2	Second Stage except 11:1
508	1	BERB0107160	Shim	Vertical Down
509	1	RBBAA006010	Ball Bearing 6010	BD
509	1	RBBEA006010	Ball Bearing 6010DD	BD Vertical Down
509	1	RBBAA006210	Ball Bearing 6210	BE
509	1	RBBEA006210	Ball Bearing 6210DD	BE Vertical Down

SHIMPO DRIVES, INC. • 1701 Glenlake Avenue Itasca, IL 60143 USA • Phone: (630) 924-7138 or (800) 842-1479 • Fax: (630) 924-7382
www.shimpodrives.com • info@shimpodrives.com

Frame Sizes B195/2B100-20H Output Section Parts List

ITEM	QTY	PART #	DESCRIPTION	COMMENTS
512	1	RLKAA007040	Key 5x5x42	BD, Second Stage 11:1
512	1	RLKAA010038	Key 10x8x38 KM7	BD, Second Stage except 11:1
512	1	RLKAA010038	Key 10x8x38 KM7	BE, Second Stage 11:1
512	1	RLKAA012058	Key 12x8x58 KM10	BE, Second Stage except 11:1
701	1	C/F	Ring Output Housing NB1	
708	4	BERA1200080	Stud Bolt M8x90	C-Face Input
708	4	RSRAC008085	Hex. Head Cap Screw, M8x85, 11T	Shaft input
712	2	RSRBA008055	Hex. Head Cap Screw, M8x55	

Frame Sizes B/2B100-B20H Output Section:

Exploded View

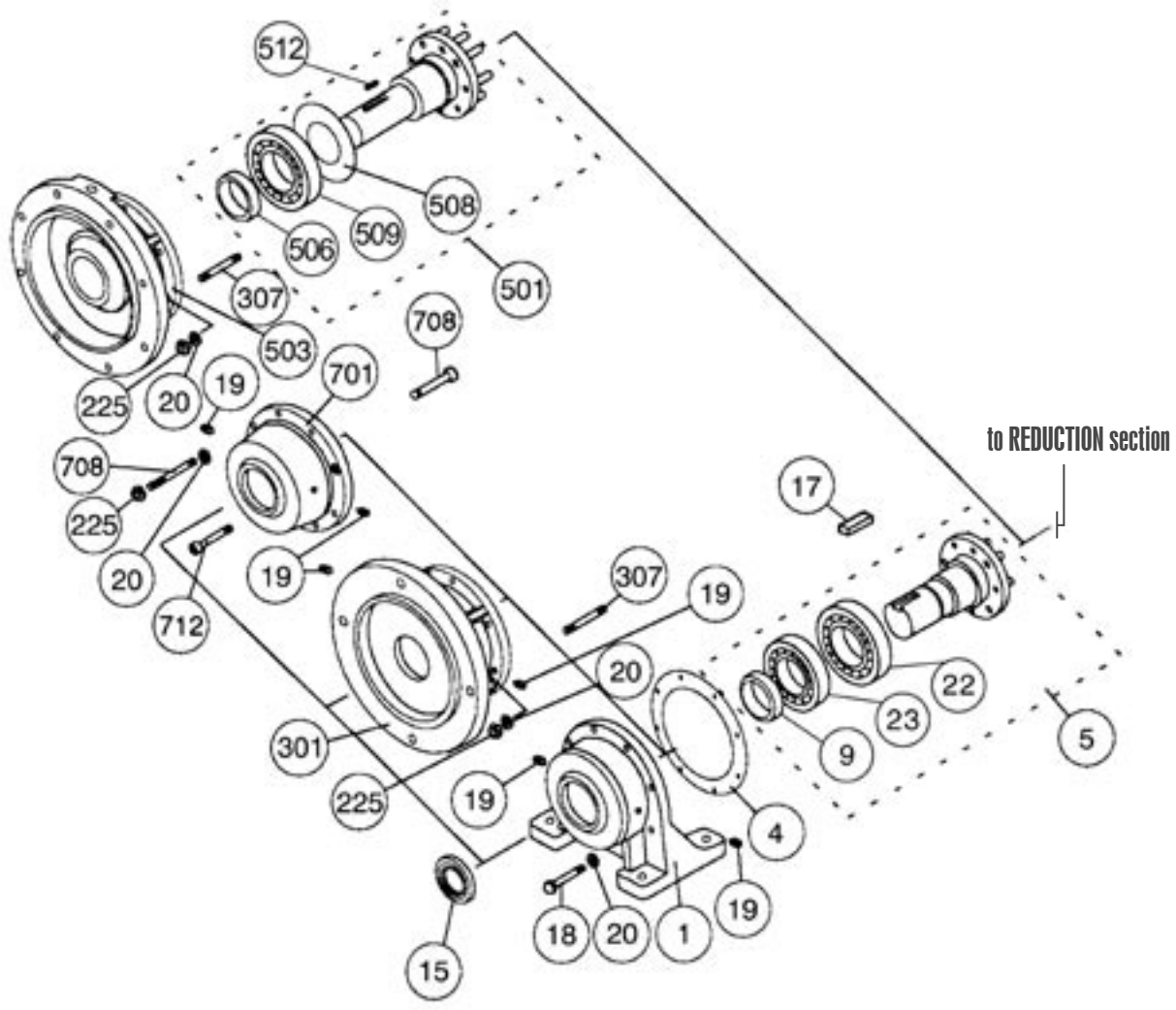

GYROMAX®

Frame Sizes B195/2B100-20H Reduction Section Parts List

ITEM	QTY	PART #	DESCRIPTION	COMMENTS
2	1	BXEB0200021	Pin Housing EX-6B	6:1
2	1	BXEB1200020	Pin Housing EX 8,11,17,35B	8:1
2	1	BERJ1200020	Pin Housing NB1	11,17,35,71:1
2	1	BXEB3200020	Pin Housing EX-13B	13:1
2	1	BXEB4200020	Pin Housing EX-15B	15:1
2	1	BXEB6200020	Pin Housing EX-21,43B	21,43:1
2	1	BXEB7200020	Pin Housing EX-25,51B	25,51:1
2	1	BERJ3200020	Pin Housing NB2	29,59:1
2	1	BERJ5200020	Pin Housing NB3	47:1
2	1	BXEBF200021	Pin Housing EX-87B	87:1
6	2*	BXEB0100220	Wheel EX-6AB	6:1
6	2*	BXEB1100220	Wheel EX-8AB	8:1
6	2*	BERB1200220	Wheel NB1	11:1
6	2*	BXEB3100220	Wheel EX-13AB	13:1
6	2*	BXEB4100220	Wheel EX-15AB	15:1
6	2*	BERB2200220	Wheel NB2	17:1
6	2*	BXEB6100220	Wheel EX-21AB	21:1
6	2*	BXEB7100220	Wheel EX-25AB	25:1
6	2*	BERA4100221	Wheel A3	29:1
6	2*	BERA3100223	Wheel A4	35:1
6	2*	BXEBA100220	Wheel EX-43AB	43:1
6	2*	BERA5100223	Wheel A5	47:1
6	2*	BXEBC100220	Wheel EX-51AB	51:1
6	2*	BERA6100221	Wheel A6	59:1
6	2*	BERA7100221	Wheel A7	71:1
6	2*	BXEBF100220	Wheel EX-87AB	87:1
7	1	BXEA0200231	Wheel Spacer EX-6B	6:1
7	1	BERB1200230	Wheel Spacer NB1	11:1
7	1	BXEA1200230	Wheel Spacer EX-8-87B	8,13,15,21,25,43,51,87:1
7	1	BERB2200230	Wheel Spacer NB2	17:1
7	1	BERA3200231	Wheel Spacer B3	29,35,47,59,71:1
8	16*	BERB1200360	Bushing NB1	6,11,17:1
8	8*	BXEA8200360	Bushing EX-8-87B	8,13,15,21,25,43,51,87:1
8	16*	BERA1100361	Bushing A1	29,35,47,59,71:1
10	**	BERA1200381	Internal Pin B1	6,11,17,29,35,47,59,71:1
10	**	BXEB1200380	Internal Pin EX-8-59B	8,13,15,21,25,43,51:1
10	44*	BXEBF200380	Internal Pin EX-87B	87:1
11	56*	BXEA0100440	Internal Pin Roller EX-6AB	6:1
12	2*	BERA1100400	Eccentric Bearing A1	6,11:1
12	2*	BERA2100400	Eccentric Bearing A2	8,13,17:1
12	2*	BXEB4100600	Eccentric Bearing EX-15,17AB	15:1
12	2*	BXEB6100600	Eccentric Bearing EX-21AB	21:1
12	2*	BERA3100400	Eccentric Bearing A4	25,35:1
12	2*	BERA4100400	Eccentric Bearing A3	29:1
12	2*	BXEBA100600	Eccentric Bearing EX-43-47AB	43:1
12	2*	BERA5100400	Eccentric Bearing A5	47:1
12	2*	BERA7100400	Eccentric Bearing A7	51,71:1
12	2*	BERA6100400	Eccentric Bearing A6	59:1
12	2*	BXEBE100600	Eccentric Bearing EX-71,87AB	87:1
104	1	BERA1100430	Distance Collar NB1	6,11:1
104	1	BERA0201030	Distance Collar NB2	except 6,11:1
105	1	RBNGA121512	Inner Race 121512 A1	6,11:1
106	1	RBRCA153212	Roller Bearing NF153212	

** indicates that these parts must be purchased in sets of this size | ** indicates that the number of items per reducer varies*

SHIMPO DRIVES, INC. • 1701 Glenlake Avenue Itasca, IL 60143 USA • Phone: (630) 924-7138 or (800) 842-1479 • Fax: (630) 924-7382
www.shimpodrives.com • info@shimpodrives.com

Frame Sizes B195/2B100-20H Reduction Section:
Exploded View

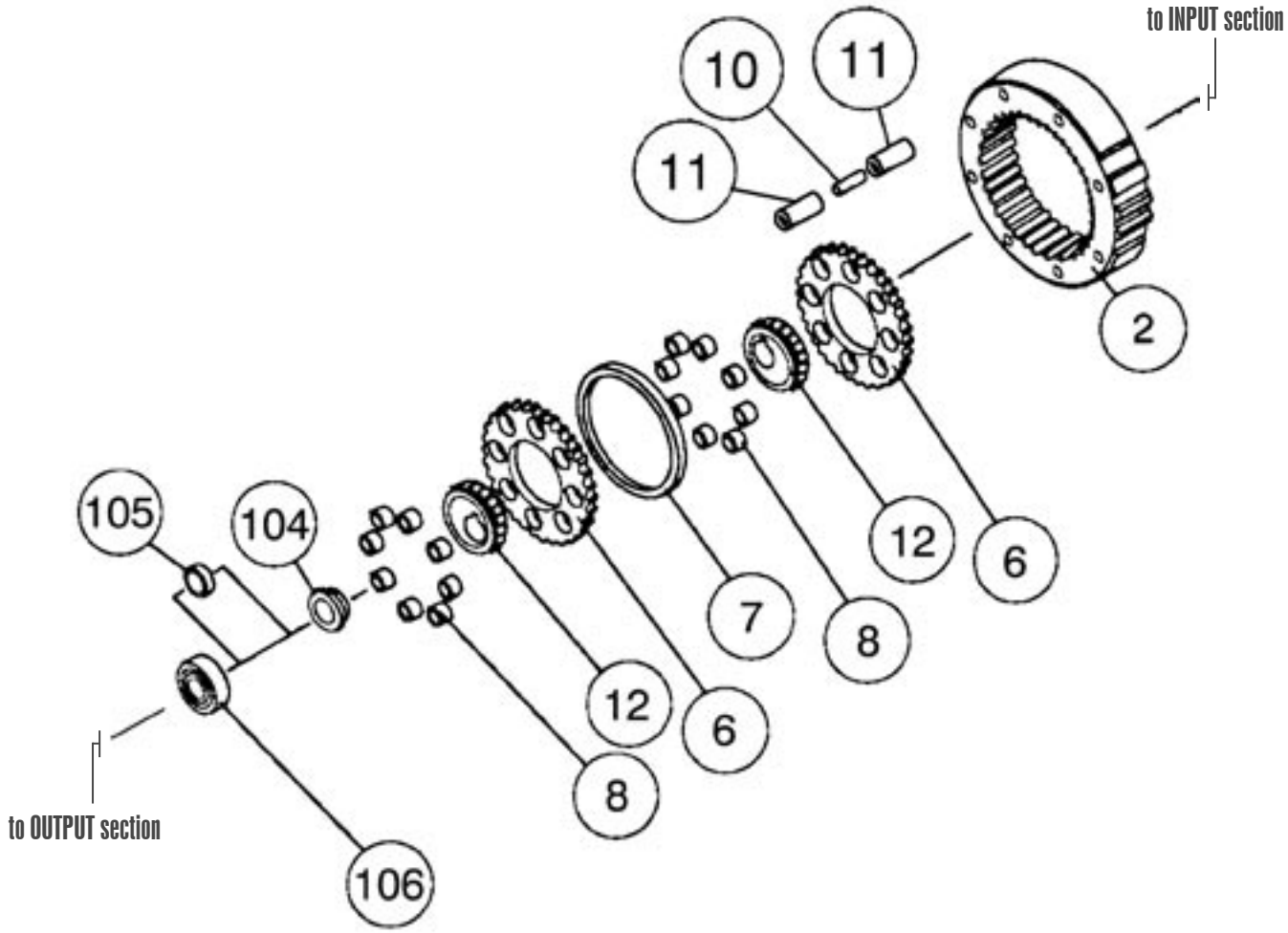

GYROMAX®

Frame Sizes B195/2B100-20H Input Section Parts List

ITEM	QTY	PART #	DESCRIPTION	COMMENTS
4	2	BRXA6060180	Gasket at Pin Housing, A, B, NB	
16	1	RLKAA004024	Key KM1 4x4x24	6,11:1
16	1	RLKAA005032	Key KM2 5x5x32	except 6,11:1
20	6	RWLBA000008	Spring Washer Disk, PS, M8	
21	1	RSPBB000108	Hex. Headless Plug PT1/8	
51	1	RBBCA006007	Ball Bearing 6007ZZ	56C/140TC
51	1	RBBCA006209	Ball Bearing 6209ZZ	180TC
53	2	RLSSA000035	Snap Ring S-35 External	
63	1	RBBCA006204	Ball Bearing 6204ZZ	
66	1	RLSAA000020	Snap Ring S-20 External	
101	1	BXKG0107020	Motor Flange A2 56C/140TC	
101	1	BXKG0222020	Motor Flange B1 180TC	
102	1	KNZY1107030	Motor Shaft A5 w/Brg	6,11:1 56C
102	1	KNZY2107030	Motor Shaft A6 w/Brg	56C except 6,11:1
102	1	KNZY1115030	Motor Shaft B1 w/Brg	6,11:1 140TC
102	1	KNZY2115030	Motor Shaft B2 w/Brg	140TC except 6,11:1
102	1	KNZY1222030	Motor Shaft B3 w/Brg	6,11:1 180TC
102	1	KNZY2222030	Motor Shaft B4 w/Brg	180TC except 6,11:1
103	1	BERA0101040	Counter Shaft Bushing NB1	6,11:1
103	1	BERA0201030	Counter Shaft Bushing NB2	C-Face Input except 6,11:1
107	2	SDSAD052062	Shim	56C/140TC
110	1	RLSRA000062	Snap Ring R-62 Internal	
110	1	RLSRA000085	Snap Ring R-85 Internal	
111	1	ROSAA304007	Oil Seal S304007	56C/140TC
111	1	ROSAA405808	Oil Seal S405808	180TC
112	1	RSIAA000008	EYE BOLT M8	180TC
113	1	RWSAA000008	Spring Washer M8	180TC
201	1	BXEA1100110	Input Bracket A1	
206	1	KNZY1100310	Input Shaft A1 w/Brg	6,11:1
206	1	KNZY2100310	Input Shaft A2 w/Brg	except 6,11:1
210	1	BNZY1100460	Input Shaft Bushing	Shaft Input except 6,11:1
216	1	RLSRA000047	Snap Ring R-47 Internal	
218	1	ROSPA253507	Oil Seal D253507	
219	1	56000303	Key 3/8x3/8x0.98	Input Shaft
225	6	RSNAA000008	Hex. Nut, M8, Type 1	

SHIMPO DRIVES, INC. • 1701 Glenlake Avenue Itasca, IL 60143 USA • Phone: (630) 924-7138 or (800) 842-1479 • Fax: (630) 924-7382
www.shimpodrives.com • info@shimpodrives.com

Frame Sizes B195/2B100-20H Input Section:

Exploded View

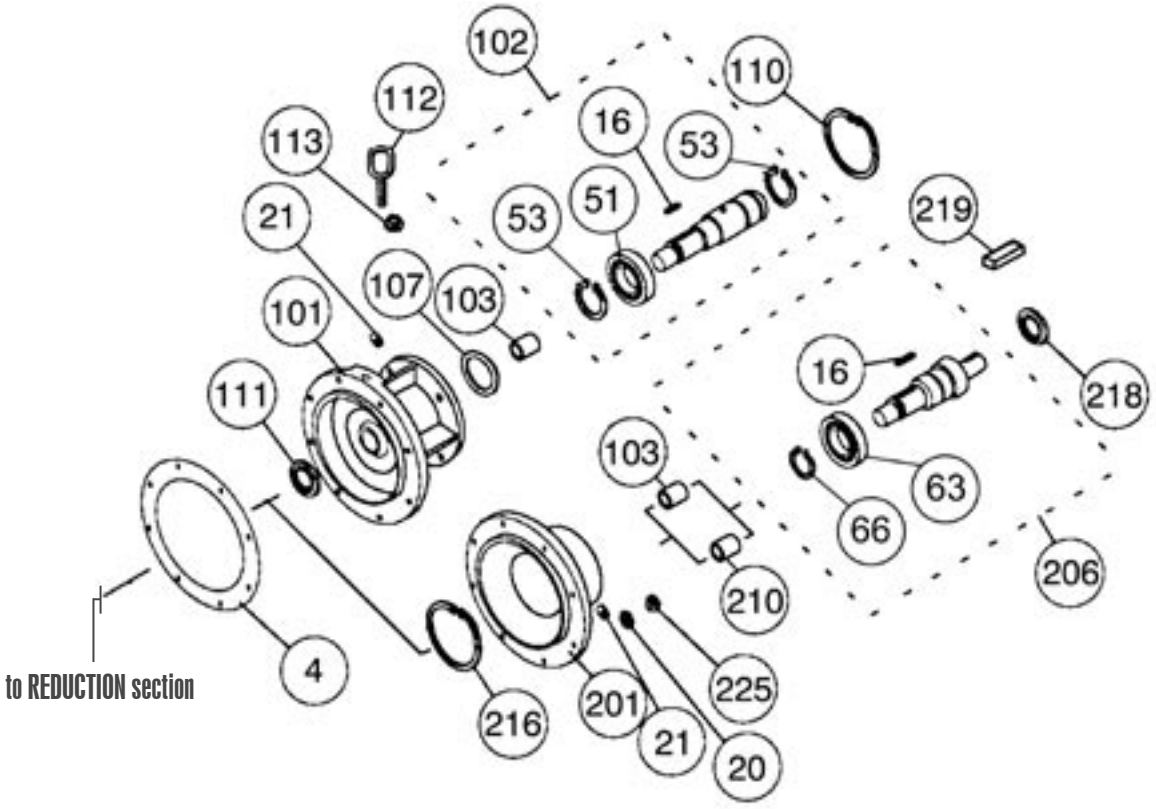

GYROMAX®

Frame Sizes C/2C110-C335 Output Section Parts List

ITEM	QTY	PART #	DESCRIPTION	COMMENTS
1	1	BXEA1300810	Base EX-C1	C/2C110,115
1	1	BEXA1300820	Base EX-C2	C/2C225
1	1	BNZY1300820	Base C3	C330,335
4	2	BXEA1300560	Gasket at Pin Housing EX-C	
5	1	KNZY1300840	Output Shaft Assy. C11	C/2C110-225 6,11:1
5	1	KNZY2300840	Output Shaft Assy. C12	C/2C110-225 8,13,15,21,25,43,51,87:1
5	1	KNZY4300221	Output Shaft Assy. C13	C/2C110-225 29,35,47,59,71:1
5	1	KNZY1300850	Output Shaft Assy. C21	C330,335 11:1
5	1	KNZY2300850	Output Shaft Assy. C22	C330,335 17:1
5	1	KNZY4300850	Output Shaft Assy. C23	C330,335 29,35,47,59,71:1
9	1	BERB1300470	Output Shaft Bushing NC1	except C330,335
13	1	BNZY1300880	Bearing Spacer C1	C330,335
14	1	RLSSA000055	Snap Ring S-55 External	C330,335
15	1	ROSPA557008	Oil Seal D557008	
17	1	56000313	Key 3/8 x 3/8 x 1.77 (45mm)	C/2C110-225
17	1	56000318	Key 1/2 x 1/2 x 2.17 (55mm)	C330,335
18	1	RLPAA010030	Spring Pin 10x30	
19	6	RSRAC010085	Hex. Head Screw M10x85, 11T	C-Face Input
19	6	RSRAC010090	Hex. Head Screw M10x90, 11T	Shaft Input
20	2	RSTBG008014	Set Screw M8x14, Sharp	
21	6	RWLBA000010	Spring Washer Disk, PS, M10	
23	1	RBBCA006212	Ball Bearing 6212ZZ	
24	1	RBBCA006309	Ball Bearing 6309ZZ	C/2C110-225
24	1	RBBCA006211	Ball Bearing 6211ZZ	C330,335
225	6	RSNAA000010	Hex. Nut, M10, Type 1	
301	1	BERG1331160	Flange NC1	"F" Version
301	1	BXEA1331660	Flange EX-C1	"V" Version
307	6	BERA1331181	Stud Bolt M10x100	
501	1	KERB0003510	Counter Shaft Assy. NCE1	CE, 11x11
501	1	KERB0003520	Counter Shaft Assy. NCE2	CE, 6,11x13-87
501	1	KERB0003530	Counter Shaft Assy. NCE3	CE, 8,13-87x13-87
501	1	KERB0003540	Counter Shaft Assy. NCE4	CE, 29,35,47,59,71x29-87
501	1	KERB0003550	Counter Shaft Assy. NCE5	CE, 11x11, VD
501	1	KERB0003560	Counter Shaft Assy. NCE6	CE, 6,11x13-87, VD
501	1	KERB0003570	Counter Shaft Assy. NCE7	CE, 8,13-87x13-87, VD
501	1	KERB0003580	Counter Shaft Assy. NCE8	CE, 29,35,47,59,71x29-87, VD
501	1	KERB0003610	Counter Shaft Assy. NCF1	CF, 6,11x11,17
501	1	KERB0003620	Counter Shaft Assy. NCF2	CF, 6,11x13-87
501	1	KERB0003630	Counter Shaft Assy. NCF3	CF, 17x17
501	1	KERB0003640	Counter Shaft Assy. NCF4	CF, 8,13-87x13-87
501	1	KERB0003650	Counter Shaft Assy. NCF5	CF, 29,35,47,59,71x29-87
501	1	KERB0003660	Counter Shaft Assy. NCF6	CF, 6,11x11,17, VD
501	1	KERB0003670	Counter Shaft Assy. NCF7	CF, 6,11x13-87, VD
501	1	KERB0003680	Counter Shaft Assy. NCF8	CF, 17x17, VD
501	1	KERB0003690	Counter Shaft Assy. NCF9	CF, 8,13-87x13-87, VD
501	1	KERB0003700	Counter Shaft Assy. NCF10	CF, 29,35,47,59,71x29-87, VD

C/F - Contact SHIMPO Drives Customer Service

SHIMPO DRIVES, INC. • 1701 Glenlake Avenue Itasca, IL 60143 USA • Phone: (630) 924-7138 or (800) 842-1479 • Fax: (630) 924-7382
www.shimpodrives.com • info@shimpodrives.com

Frame Sizes C/2C110-C335 Output Section Parts List

ITEM	QTY	PART #	DESCRIPTION	COMMENTS
503	1	BXEB0935010	Coupler EX-CE1	CE
503	1	BXEB0937010	Coupler EX-CF1	CF
506	1	BERB0107040	Counter Shaft Bushing NE1	11:1, Second Stage E Frame
506	1	BERB0207040	Counter Shaft Bushing NE2	Second Stage E Frame except 11:1
506	1	BERB0111040	Counter Shaft Bushing NF1	11,17:1, Second Stage F Frame
506	1	BERB4511040	Counter Shaft Bushing NF2	Second Stage F Frame except 11,17:1
508	1	BERB0105160	Shim	Vertical Down
509	1	RBBAA006212	Ball Bearing 6212	
509	1	RBBEA006212	Ball Bearing 6212DD	Vertical Down
512	1	RLKAA010038	Key 10x8x38 KM7	11:1, Second Stage E Frame
512	1	RLKAA012058	Key 12x8x58 KM10	Second Stage E Frame except 11:1
512	1	RLKAA012058	Key 12x8x58 KM10	11,17:1, Second Stage F Frame
512	1	RLKAA015058	Key 15x10x58 KM12	Second Stage F Frame except 11,17:1
701	1	C/F	Ring Output Housing NC1	
708	4	BERA1300080	Stud Bolt M10X118	C-Face Input
708	4	BERA1300090	Hex. Head Cap Screw, M10x110, 11T	Shaft input
712	2	RSRBA010075	Hex. Head Cap Screw, M10x75	

C/F - Contact SHIMPO Drives Customer Service

Frame Sizes C/2C110-C335 Output Section:

Exploded View

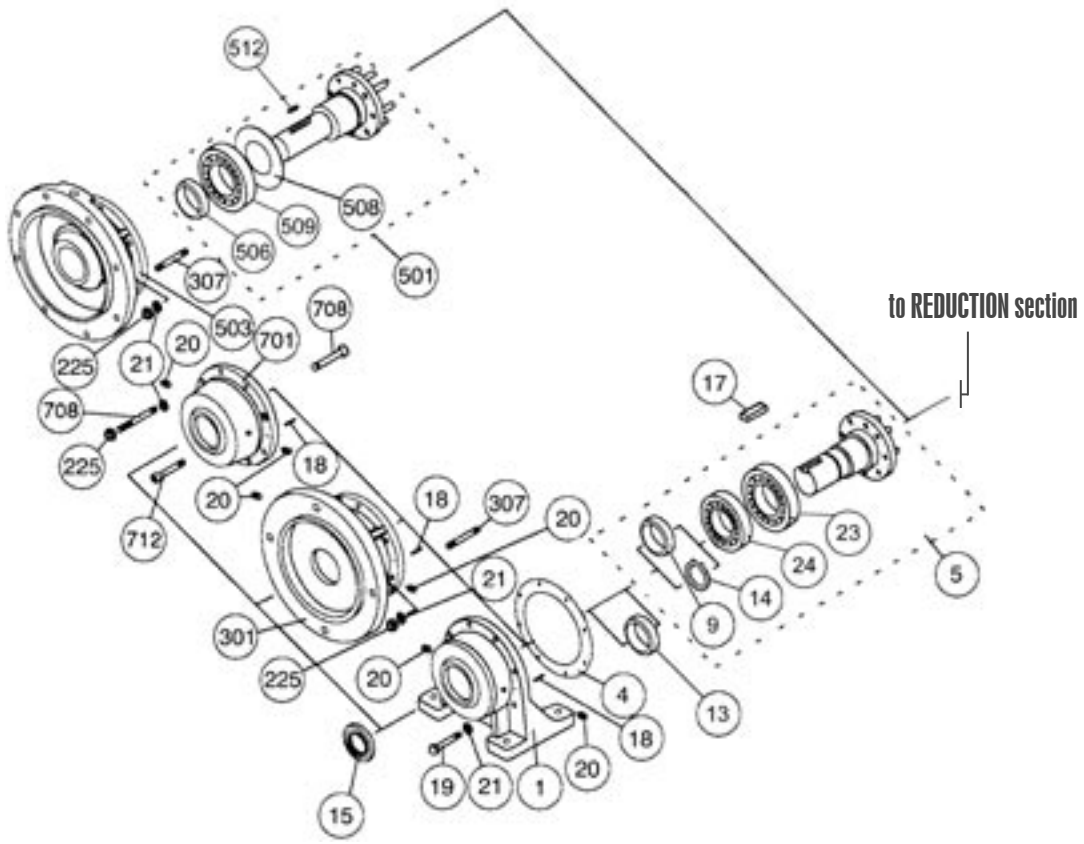

GYROMAX®

Frame Sizes C/2C110-C335 Reduction Section Parts List

ITEM	QTY	PART #	DESCRIPTION	COMMENTS
2	1	BXEB0300022	Pin Housing EX-6C	6:1
2	1	BXEB1300022	Pin Housing EX-8,11,17C	8:1
2	1	BERJ1300020	Pin Housing NC1	11,17,35,71:1
2	1	BXEB3300022	Pin Housing EX-13C	13:1
2	1	BXEB4300022	Pin Housing EX-15C	15:1
2	1	BXEB6300021	Pin Housing EX-21C	21:1
2	1	BXEB7300022	Pin Housing EX-25C	25:1
2	1	BERJ3300020	Pin Housing NC2	29,59:1
2	1	BEXBA300021	Pin Housing EX-43C	43:1
2	1	BERJ5300020	Pin Housing NC3	47:1
2	1	BXEBC300022	Pin Housing EX-51C	51:1
2	1	BXEBF300022	Pin Housing EX-87C	87:1
6	2*	BXEB0300220	Wheel EX-6C	6:1
6	2*	BXEB1300220	Wheel EX-8C	8:1
6	2*	BERB1300220	Wheel NC1	11:1
6	2*	BXEB3300220	Wheel EX-13C	13:1
6	2*	BXEB4300220	Wheel EX-15C	15:1
6	2*	BERB2300220	Wheel NC2	17:1
6	2*	BEXB6300220	Wheel EX-21C	21:1
6	2*	BXEB7300220	Wheel EX-25C	25:1
6	2*	BERA4300221	Wheel C3	29:1
6	2*	BERA3300222	Wheel C4	35:1
6	2*	BEXBA300220	Wheel EX-43C	43:1
6	2*	BERA5300222	Wheel C5	47:1
6	2*	BXEBC300220	Wheel EX-51C	51:1
6	2*	BERA6300222	Wheel C6	59:1
6	2*	BERA7300222	Wheel C7	71:1
6	2*	BXEBF300221	Wheel EX-87C	87:1
7	1	BERB1300230	Wheel Spacer NC1	6,11:1
7	1	BERB2300230	Wheel Spacer NC2	17:1
7	1	BERA3300231	Wheel Spacer C3	29,35,47,59,71:1
7	1	BXEB1300230	Wheel Spacer EX-8-87C	8,13,15,21,25,43,51,87:1
8	16*	BERB1300360	Bushing NC1	11,17:1
8	16*	BERA1300361	Bushing C1	6,29,35,47,59,71:1
8	8*	BXEA1300230	Bushing EX-8-87C	8,13,15,21,25,43,51,87:1
10	**	BERA1300381	Internal Pin C1	All Ratios except 87:1
10	44*	BXEA8300380	Internal Pin EX-87C	87:1
11	56*	BXEA0300440	Internal Pin Roller EX-6C	6:1
11	**	BXEA1300440	Internal Pin Roller EX-8-25C	8,13,15,21,25:1
12	2*	BERA1300400	Eccentric Bearing C1	6,11:1
12	2*	BERA2300400	Eccentric Bearing C2	8,13,15,17:1
12	2*	BXEB6300600	Eccentric Bearing EX-21C	21:1
12	2*	BXEB7300600	Eccentric Bearing EX-25C	25:1
12	2*	BERA4300400	Eccentric Bearing C3	29:1
12	2*	BERA3300400	Eccentric Bearing C4	35:1
12	2*	BXEBA300600	Eccentric Bearing EX-43C	43:1
12	2*	BERA5300400	Eccentric Bearing C5	47:1
12	2*	BEXBC300600	Eccentric Bearing EX-51C	51:1
12	2*	BERA6300400	Eccentric Bearing C6	59:1
12	2*	BERA7300400	Eccentric Bearing C7	71:1
12	2*	BXEBE300600	Eccentric Bearing EX-87C	87:1

** indicates that these parts must be purchased in sets of this size | ** indicates that the number of items per reducer varies*

SHIMPO DRIVES, INC. • 1701 Glenlake Avenue Itasca, IL 60143 USA • Phone: (630) 924-7138 or (800) 842-1479 • Fax: (630) 924-7382
www.shimpodrives.com • info@shimpodrives.com

Frame Sizes C/2C110-C335 Reduction Section Parts List

ITEM	QTY	PART #	DESCRIPTION	COMMENTS
104	1	BERA1300430	Distance Collar NC1	6,11:1 Shaft In, 180TC/210TC
104	1	BERA0202030	Distance Collar NC2	Shaft In, 210TC except 6,11:1
105	1	RBNGA172016	Inner Race 172016 NC1	6,11:1
106	1	RBRCA002204	Roller Bearing NF2204	
108	1	RLSAA000022	Snap Ring S-22 External	56C/180TC/210TC except 6,11:1

** indicates that these parts must be purchased in sets of this size | ** indicates that the number of items per reducer varies*

Frame Sizes C/2C110-C335 Reduction Section:

Exploded View

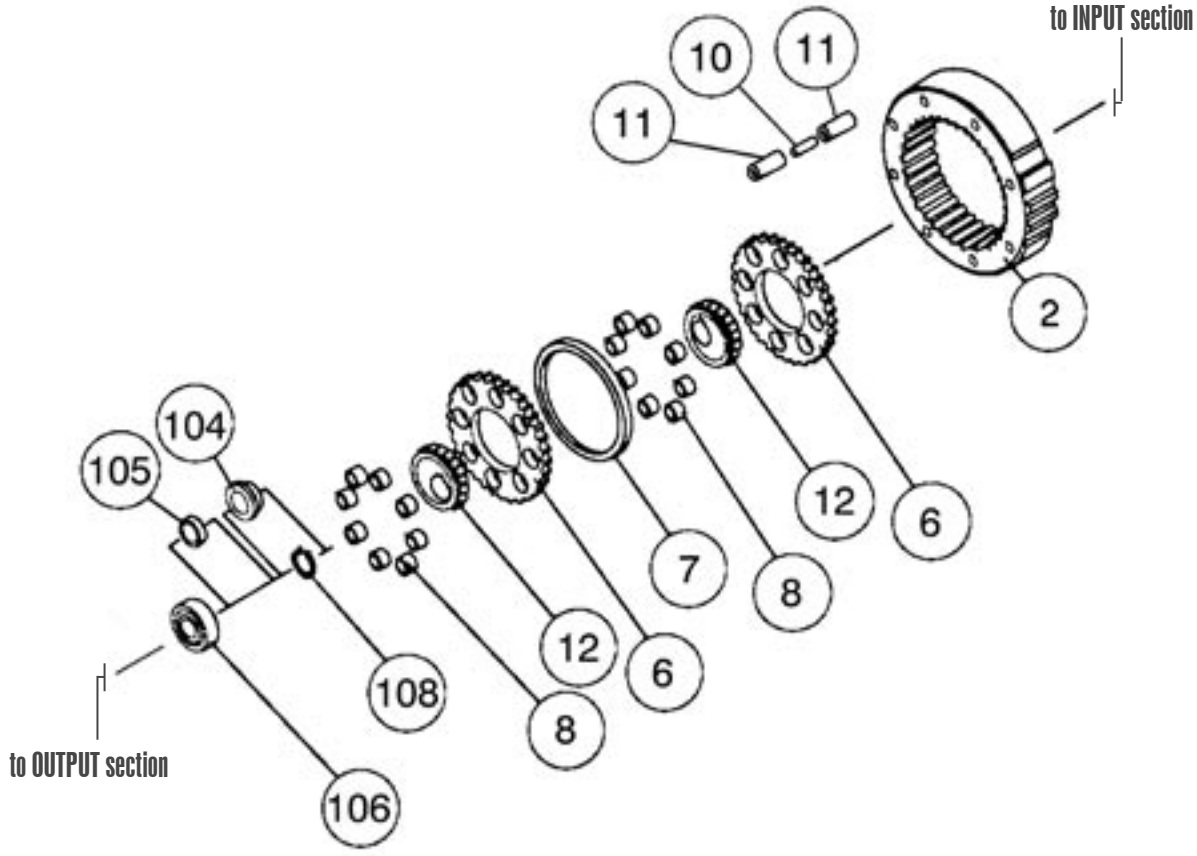

GYROMAX®

Frame Sizes C/2C110-C335 Input Section Parts List

ITEM	QTY	PART #	DESCRIPTION	COMMENTS
4	2	BXEA1300560	Gasket at Pin Housing EX-C	
16	1	RLKAA005042	Key 5x5x42	6,11:1
16	1	RLKAA007040	Key 7x7x40	except 6,11:1
21	6	RWLBA000010	Spring Washer Disk, PS, M10	
22	1	RSPBB000108	Hex. Headless Plug PT1/8	
50	1	RBBCA006208	Ball Bearing 6208ZZ	56C/140TC
50	1	RBBCA006209	Ball Bearing 6209ZZ	180TC
50	1	RBBCA006211	Ball Bearing 6211ZZ	210TC
52	2	RLSSA000040	Snap Ring S-40 External	56C/140TC
52	2	RLSSA000045	Snap Ring S-45 External	180TC
52	2	RLSSA000055	Snap Ring S-55 External	210TC
63	1	RBBCA006206	Ball Bearing 6206ZZ	
66	1	RLSAA000030	Snap Ring S-30 External	
101	1	BXKG0307020	Motor Flange C3 56C/140TC	
101	1	BXKG0322020	Motor Flange C4 180TC	
101	1	BXKG0355020	Motor Flange C5 210TC	
102	1	KNZY3307050	Motor Shaft C5 w/Brg	56C except 6,11:1
102	1	KNZY1315050	Motor Shaft C1 w/Brg	6,11:1 140C
102	1	KNZY2315050	Motor Shaft C3 w/Brg	140TC except 6,11:1
102	1	KNZY1322050	Motor Shaft C2 w/Brg	6,11:1 180TC
102	1	KNZY2322050	Motor Shaft C4 w/Brg	180TC except 6,11:1
102	1	KNZY1355030	Motor Shaft C6 w/Brg	6,11:1 210TC
102	1	KNZY2355030	Motor Shaft C7 w/Brg	210TC except 6,11:1
103	1	BERB0102040	Counter Shaft Bushing NC1	6,11:1 Shaft In, 210TC
103	1	BERB0202040	Counter Shaft Bushing NC2	Shaft In, 210TC except 6,11:1
110	1	RLSRA000080	Snap Ring R-80 Internal	56C/140TC
110	1	RLSRA000085	Snap Ring R-85 Internal	180TC
110	1	RLSRA000100	Snap Ring R-100 Internal	210TC
111	1	ROSAA405808	Oil Seal S405808	56C/140TC/180TC
111	1	ROSAA506809	Oil Seal S506809	210TC
112	1	RSIAA000008	EYE BOLT M8	C-Face Input
113	1	RWSAA000008	Spring Washer M8	C-Face Input
201	1	BXEA1300110	Input Bracket C1	
206	1	KNZY1300310	Input Shaft C1 w/Brg	6,11:1
206	1	KNZY2300310	Input Shaft C2 w/Brg	except 6,11:1
216	1	RLSRA000062	Snap Ring R-62 Internal	
218	1	ROSPA304508	Oil Seal D304508	
219	1	56000308	Key 1/4 x 1/4 x 1.25 (32mm)	
225	6	RSWAA000010	Hex. Nut, M10, Type 1	

SHIMPO DRIVES, INC. • 1701 Glenlake Avenue Itasca, IL 60143 USA • Phone: (630) 924-7138 or (800) 842-1479 • Fax: (630) 924-7382
www.shimpodrives.com • info@shimpodrives.com

Frame Sizes C/2C110-C335 Input Section:

Exploded View

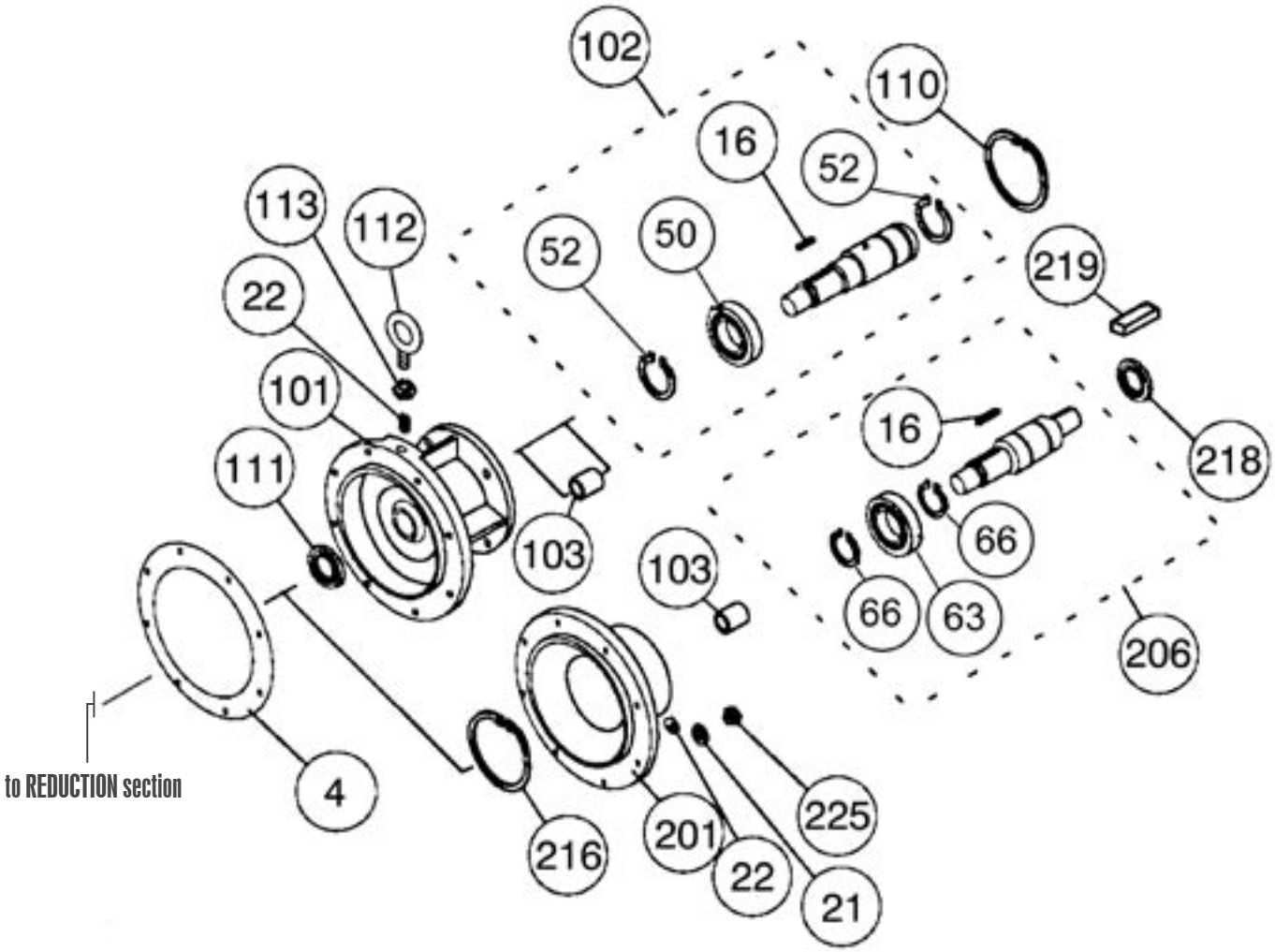

GYROMAX®

Frame Sizes D/2D130-365 Output Section Parts List

ITEM	QTY	PART #	DESCRIPTION	COMMENTS
1	1	BXEA1400810	Base EX-D1	D/2D130-145
1	1	BXEA1400820	Base EX-D2	D/2D255
1	1	BXEA1400830	Base EX-D3	D/2D360,365
4	1	BERB1400051	Bearing Cover A ND1	
5	1	BERB1400480	Locating Spacer ND1	6,11;1
5	1	BERB2400480	Locating Spacer ND2	8,13,15,17,21,25,43,51,87:1
5	1	BERB4400480	Locating Spacer ND3	29,35,47,59,71:1
6	1	BERB1400470	Output Bushing ND1	
7	1	BERA1400540	Gasket at Bearing Cover A ND1	
8	2	BXEA1400560	Gasket at Pin Housing, ND1	
9	1	KNZY1400840	Output Shaft Assy. D11	D/2D145,255, 6,11:1
9	1	KNZY2400840	Output Shaft Assy. D12	D/2D145,255, 8,13,15,17,21,25,43,51,87:1
9	1	KNZY4400840	Output Shaft Assy. D13	D/2D145,255, 29,35,47,59,71:1
9	1	KNZY1400850	Output Shaft Assy. D21	D/2D360,365, 6,11:1
9	1	KNZY2400850	Output Shaft Assy. D22	D/2D360,365, 8,13,15,17,21,25,43,51,87:1
9	1	KNZY4400850	Output Shaft Assy. D23	D/2D360,365, 29,35,47,59,71:1
9	1	KNZY1400860	Output Shaft Assy. D31	D/2D130,135, 6,11:1
9	1	KNZY2400860	Output Shaft Assy. D32	D/2D130,135, 8,13,15,17,21,25,43,51,87:1
9	1	KNZY4400860	Output Shaft Assy. D33	D/2D130,135, 29,35,47,59,71:1
17	1	RBBGA006213	Ball Bearing 6213NR	
17	1	RBBKA006213	Ball Bearing 6213NRDD	Vertical Up
19	1	ROSPA750013	Oil Seal D750013	
21	1	56000318	Key 1/2x1/2x2.17(55mm)	D/2D130,135
21	1	56000319	Key 1/2x1/2x2.95(75mm)	D/2D145-365
22	1	RLPAA010035	Spring Pin 10x35	
23	8	RSRAC010090	Hex. Head Screw M10x90, 11T	
24	6	RSRAA010035	Hex. Head Bolt M10x35	
26	8	RSNBA000012	Nut, Hex. M12 Type 3	
27	8	RWLBA000010	Spring Washer Disk, PS, M10	
28	8	RWLBA000012	Spring Washer Disk, PS, M12	
29	6	RWSAA000010	Spring Washer M10	
32	4	RSPAA000104	Square Head Plug PT1/4 PG2	
56	4	RSSAA008020	Socket Screw M8x20	6,11:1
56	4	RSSAA010020	Socket Screw M10x20	except 6,11:1
57	4	RWADB000008	Lock Washer M8	6,11:1
57	4	RWADB000010	Lock Washer M10	except 6,11:1
301	1	BERG1431160	Output Flange ND1	"F" Version
301	1	BXEA1431661	Output Flange EX-VD1	"V" Version D/2D130-255
301	1	BXEA1431671	Output Flange EX-VD2	"V" Version D/2D360,365
307	8	BERA1331181	Stud Bolt M10x110	
308	8	RSNAA000010	Nut M10 Type 1	
501	1	KERB0004610	Counter Shaft Assy. NDF1	6,11x11,17
501	1	KERB0004620	Counter Shaft Assy. NDF2	6,11x13-87
501	1	KERB0004630	Counter Shaft Assy. NDF3	17x17
503	1	BEXB0947010	Coupler EX-DF1	DF195

SHIMPO DRIVES, INC. • 1701 Glenlake Avenue Itasca, IL 60143 USA • Phone: (630) 924-7138 or (800) 842-1479 • Fax: (630) 924-7382
www.shimpodrives.com • info@shimpodrives.com

Frame Sizes D/2D130-365 Output Section Parts List

ITEM	QTY	PART #	DESCRIPTION	COMMENTS
504	8	BERA1331181	Stud Bolt M10x100	
506	1	BERB0111040	Counter Shaft Bushing NF1	For Counter Shaft Assy. NDF1 & 3
506	1	BERB4511040	Counter Shaft Bushing NF2	For Counter Shaft Assy. NDF2
509	1	RBBAA006213	Ball Bearing 6213	
512	1	RLKAA012058	Key 12x8x58 KM10	For Counter Shaft Assy. NDF1 & 3
512	1	RLKAA015058	Key 15x10x58 KM12	For Counter Shaft Assy. NDF2
701	1	BERG1400040	Ring Output Housing ND1	
707	6	BERA1300080	Stud Bolt M10X118	
708	8	BERB1300080	Stud Bolt M10X64	Double Reduction
712	2	RSRBA010075	Socket Screw, M10x75	

Frame Sizes D/2D130-365 Output Section:

Exploded View

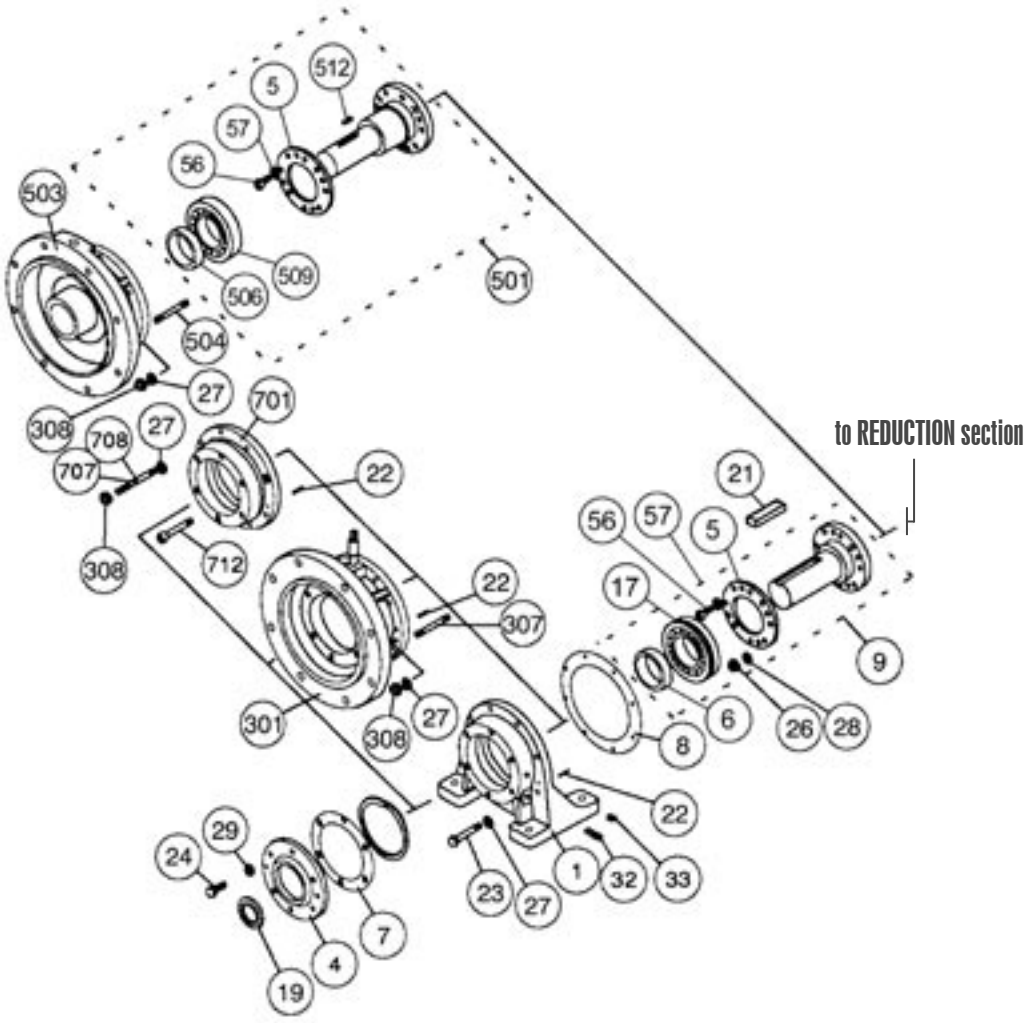

GYROMAX®

Frame Sizes D/2D130-365 Reduction Section Parts List

ITEM	QTY	PART #	DESCRIPTION	COMMENTS
2	1	BXEB0466020	Pin Housing EX-6D	6:1
2	1	BXEB1466020	Pin Housing EX-8D	8:1
2	1	BNZY1400920	Pin Housing ND1	11,17,35,71:1
2	1	BEXB3466020	Pin Housing EX-13D	13:1
2	1	BXEB4466020	Pin Housing EX-15D	15:1
2	1	BEXB6466020	Pin Housing EX-21,43D	21,43:1
2	1	BXEB7466020	Pin Housing EX-25D	25:1
2	1	BNZY3400920	Pin Housing ND2	29,59:1
2	1	BNZY5400920	Pin Housing ND3	47:1
2	1	BXEBC466020	Pin Housing EX-51D	51:1
2	1	BXEBF466020	Pin Housing EX-87D	87:1
3	1	AERB1400030	Holder with Pins ND1	6,11;1
3	1	AERB2400030	Holder with Pins ND2	8,13,15,17,21,25,43,51,87:1
3	1	AERB4400030	Holder with Pins ND3	29,35,47,59,71:1
10	2*	BXEB0400220	Wheel EX-6D	6:1
10	2*	BXEB1400220	Wheel EX-8D	8:1
10	2*	BERB1400220	Wheel ND1	11:1
10	2*	BXEB3400220	Wheel EX-13D	13:1
10	2*	BXEB4400220	Wheel EX-15D	15:1
10	2*	BERB2400220	Wheel ND2	17:1
10	2*	BXEB6400220	Wheel EX-21D	21:1
10	2*	BXEB7400220	Wheel EX-25D	25:1
10	2*	BERB4400220	Wheel ND3	29:1
10	2*	BERB3400220	Wheel ND4	35:1
10	2*	BXEBA400220	Wheel EX-43D	43:1
10	2*	BERB5400220	Wheel ND5	47:1
10	2*	BXEBC400220	Wheel EX-51D	51:1
10	2*	BERB6400220	Wheel ND6	59:1
10	2*	BERB7400220	Wheel ND7	71:1
10	2*	BXEBF400220	Wheel EX-87D	87:1
11	1	BERA1400230	Wheel Spacer D1	6:1
11	1	BERB1400230	Wheel Spacer ND1	11:1
11	1	BERB2400230	Wheel Spacer ND2	17:1
11	1	BERB3400231	Wheel Spacer ND3	29,35,47,59,71:1
11	1	BXEB1400230	Wheel Spacer EX-8-87D	8,13,15,21,25,43,51,87:1
12	16*	BERB1400360	Bushing D1	6:1
12	16*	BERB1400361	Bushing ND1	11,17,29,35,47,59,71:1
12	8*	BXEB1400360	Bushing EX8-87D	8,13,15,21,25,43,51,87:1
14	**	BERA1400381	Internal Pin D1	6,11,17,29,35,47,59,71:1
14	**	BXEA0400380	Internal Pin EX-8-87D	8,13,15,21,25,43,51,87:1
15	56*	BXEB0400440	Internal Pin Roller EX-6D	6:1
15	**	BXEB1400440	Internal Pin Roller EX-8-43D	8,13,15,21,25,43:1

** indicates that these parts must be purchased in sets of this size | ** indicates that the number of items per reducer varies*

SHIMPO DRIVES, INC. • 1701 Glenlake Avenue Itasca, IL 60143 USA • Phone: (630) 924-7138 or (800) 842-1479 • Fax: (630) 924-7382
www.shimpodrives.com • info@shimpodrives.com

Frame Sizes D/2D130-365 Reduction Section Parts List

ITEM	QTY	PART #	DESCRIPTION	COMMENTS
16	2*	BERA1400400	Eccentric Bearing D1	6,11:1
16	2*	BEXB1400600	Eccentric Bearing EX-8D	8:1
16	2*	BERA2400400	Eccentric Bearing D2	13,15,17:1
16	2*	BEXB6400600	Eccentric Bearing EX-21D	21:1
16	2*	BEXB7400600	Eccentric Bearing EX-25D	25:1
16	2*	BERA4400400	Eccentric Bearing D3	29:1
16	2*	BERA3400400	Eccentric Bearing D4	35:1
16	2*	BXEBA400600	Eccentric Bearing EX-43D	43:1
16	2*	BERA5400400	Eccentric Bearing D5	47:1
16	2*	BXEBC400600	Eccentric Bearing EX-51D	51:1
16	2*	BERA6400400	Eccentric Bearing D6	59:1
16	2*	BERA7400400	Eccentric Bearing D7	71:1
16	2*	BXEBF400600	Eccentric Bearing EX-87D	87:1
18	1	RBBCA006010	Ball Bearing 6010ZZ	6,11:1
18	1	RBBCA006210	Ball Bearing 6210ZZ	except 6,11:1
30	1	ROGAA020007	Oil Gauge 20x7(mm)	6:1
34	1	RSPBB000104	Hex. Headless Plug PT1/4	
34	1	RSPBB000108	Hex. Headless Plug PT1/8	
104	1	BERB0103030	Distance Collar ND1	6,11:1 Shaft In & 250TC
104	1	BERB0203040	Distance Collar ND2	Shaft In & 250TC except 6,11:1
105	1	RBRCA002204	Roller Bearing NF2204	6,11:1
105	1	RBRCA002305	Roller Bearing NF2305	except 6,11:1
107	1	RLSAA000024	Snap Ring S-24 External	6,11:1 210TC
107	1	RLSAA000028	Snap Ring S-28 External	140TC-210TC except 6,11:1

** indicates that these parts must be purchased in sets of this size | ** indicates that the number of items per reducer varies*

Frame Sizes D/2D130-365 Reduction Section:

Exploded View

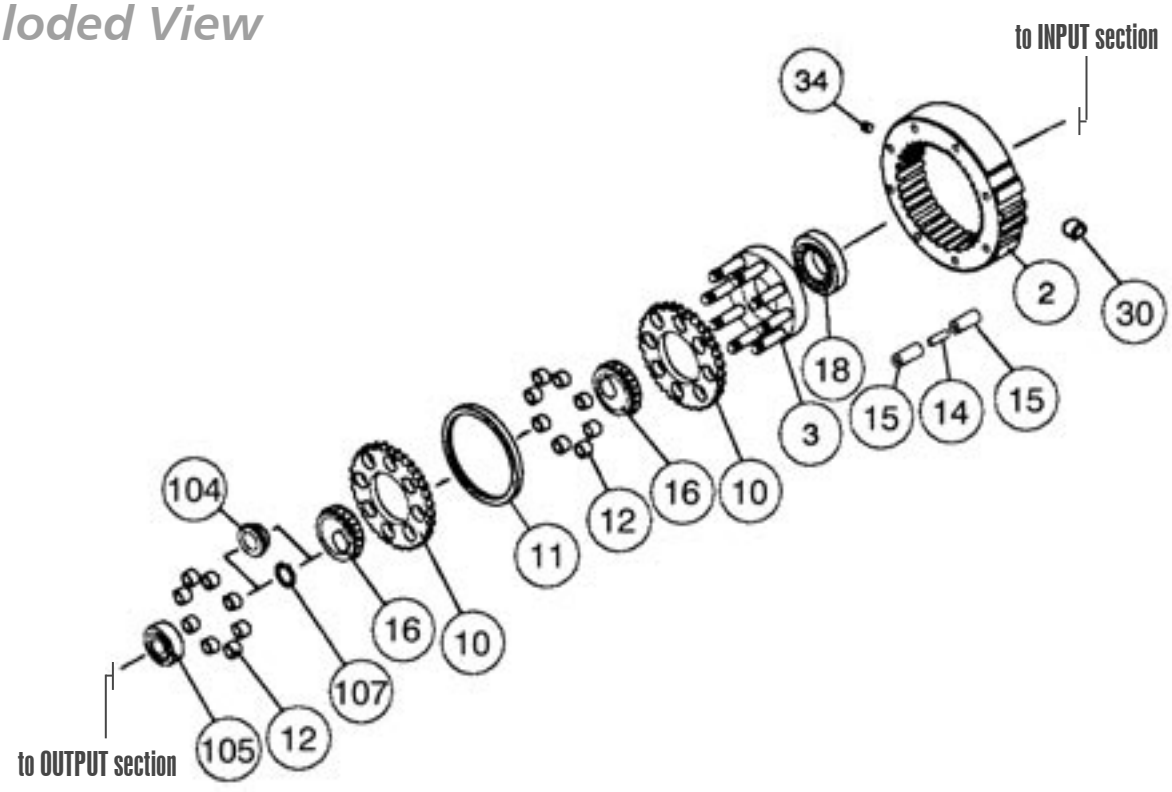

Frame Sizes D/2D130-365 Input Section Parts List

ITEM	QTY	PART #	DESCRIPTION	COMMENTS
8	2	BXEA1400560	Gasket at Pin Housing, ND1	
20	1	RLKAA007040	Key 7x7x40	6,11:1
20	1	RLKAA010038	Key 10x8x38	except 6,11:1
36	1	SSQBA000308	Breather Plug PT3/8 BC3	
37	1	ROTAA000004	Plug red 4mmOD Rubber	
51	1	RBBCA006209	Ball Bearing 6209ZZ	140TC/180TC
51	1	RBBCA006210	Ball Bearing 6210ZZ	210TC
51	1	RBBCA006212	Ball Bearing 6212ZZ	250TC
53	2	RLSSA000045	Snap Ring S-40 External	140TC/180TC
53	1	RLSSA000050	Snap Ring S-50 External	210TC
53	1	RLSSA000060	Snap Ring S-60 External	250TC
63	1	RBBCA006307	Ball Bearing 6307ZZ	
66	1	RLSAA000035	Snap Ring S-35 External	
101	1	BXKG0415021	Motor Flange D7 56C/140TC	
101	1	BXKG0437021	Motor Flange D4 180TC	
101	1	BXKG0455021	Motor Flange D5 210TC	
101	1	BXKG0491021	Motor Flange D6 250TC	
102	1	KNZY7407050	Motor Shaft D6 w/Brg	56C except 6,11:1
102	1	KNZY5415050	Motor Shaft D5 w/Brg	140TC except 6,11:1
102	1	KNZY1437050	Motor Shaft D1 w/Brg	6,11:1 180TC
102	1	KNZY2437050	Motor Shaft D3 w/Brg	180TC except 6,11:1
102	1	KNZY1455030	Motor Shaft D2 w/Brg	6,11:1 210TC
102	1	KNZY2455030	Motor Shaft D4 w/Brg	210TC except 6,11:1
102	1	KNZY1491030	Motor Shaft D7 w/Brg	6,11:1 250TC
102	1	KNZY2491030	Motor Shaft D8 w/Brg	250TC except 6,11:1
103	1	BERB0103040	Counter Shaft Bushing ND1	6,11:1 Shaft In & 250TC
103	1	BERB0203040	Counter Shaft Bushing ND2	Shaft In & 250TC except 6,11:1
109	1	RLSRA000085	Snap Ring R-85 Internal	140TC/180TC
109	1	RLSRA000100	Snap Ring R-100 Internal	210TC/250TC
110	1	ROSAA355008	Oil Seal S355008	
111	1	RSIAA000010	EYE BOLT M10	
112	1	RSSAA006014	Socket Screw M6x14	210TC
112	1	RSSAA008014	Socket Screw M8x14	250TC
113	1	RWSAA000006	Spring Washer M8	
114	1	SOBAA000015	Rubber Plug 15mm Dia. LP2	210TC/250TC
201	1	BXEA1400110	Input Bracket D1	
202	1	BERA1400120	Bearing Cover B D1	
205	1	BERA1400550	Gasket at Bearing Cover B D1	
206	1	KNZY1437060	Input Shaft D1 w/Brg	6,11:1
206	1	KNZY2437060	Input Shaft D2 w/Brg	except 6,11:1
218	1	ROSPA355008	Oil Seal D355008	
219	1	56000309	Key 1/4x1/4x1.37(35mm)	
223	4	RSRAA006025	Hex. Head Bolt M6x25	
230	4	RWSAA000006	Spring washer M6	

SHIMPO DRIVES, INC. • 1701 Glenlake Avenue Itasca, IL 60143 USA • Phone: (630) 924-7138 or (800) 842-1479 • Fax: (630) 924-7382
www.shimpodrives.com • info@shimpodrives.com

Frame Sizes D/2D130-365 Input Section:

Exploded View

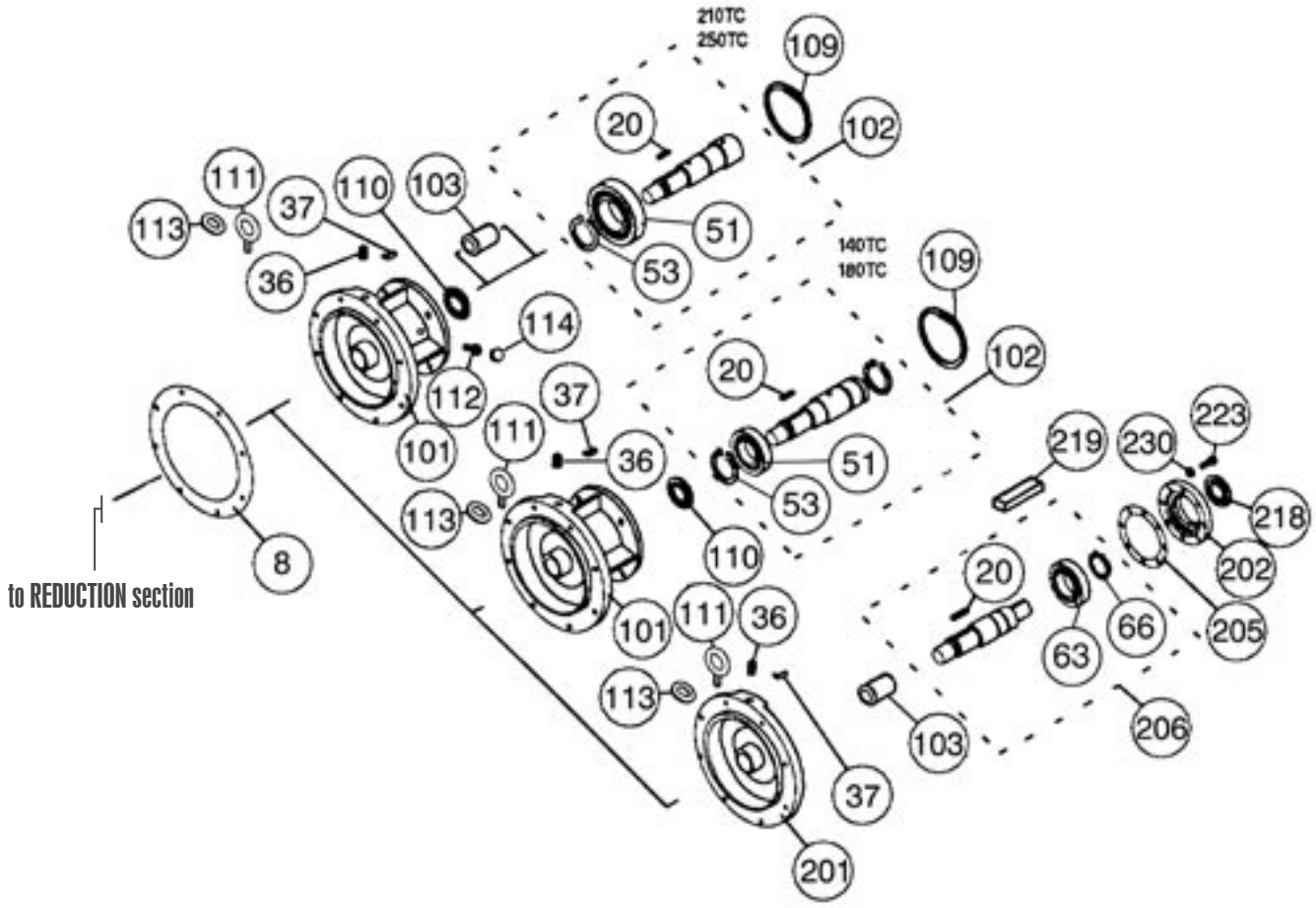

GYROMAX®

Frame Sizes E/2E160-E485 Output Section Parts List

ITEM	QTY	PART #	DESCRIPTION	COMMENTS
1	1	BXEA1500811	Base EX-E1	E/2E160,165
1	1	BXEA1500820	Base EX-E2	E/2E26H
1	1	BXEA1500830	Base EX-E3	E/2E370,375
1	1	BNZY1500830	Base E4	E480,485
4	1	BERB1500050	Bearing Cover A NE1	except E480,485
4	1	BERB1500850	Bearing Cover A NE2	E480,485
5	1	BERB1500480	Locating Spacer NE1	6,11:1
5	1	BERB2500480	Locating Spacer NE2	17:1
5	1	BERB4500480	Locating Spacer NE3	except 6,11,17:1
7	1	BERB1500470	Output Bushing NE1	except E480,485
10	1	BERB1500540	Gasket at Bearing Cover A NE1	
11	1	KNZY1500840	Output Shaft Assy. E11	E/2E160-26H, 6,11:1
11	1	KNZY2500840	Output Shaft Assy. E12	E/2E160-26H, 17:1
11	1	KNZY4500840	Output Shaft Assy. E13	E/2E160-26H, except 6,11,17:1
11	1	KNZY1500850	Output Shaft Assy. E21	E/2E370,375, 6,11:1
11	1	KNZY1500850	Output Shaft Assy. E22	E/2E370,375, 17:1
11	1	KNZY1500850	Output Shaft Assy. E23	E/2E370,375, except 6,11,17:1
11	1	KNZY1500860	Output Shaft Assy. E31	E480,485,11:1
11	1	KNZY2500860	Output Shaft Assy. E32	E480,485, 17:1
11	1	KNZY4500860	Output Shaft Assy. E33	E480,485, 29,35,47,59,71:1
15	1	RBBGA006315	Ball Bearing 6315NR	except E480,485
15	1	RBBKA006315	Ball Bearing 6315NRDD	Vertical up except E480,485
15	1	RBBGA006218	Ball Bearing 6218NR	E480,485
15	1	RBBKA006218	Ball Bearing 6218NRDD	Vertical Up E480,485
21	1	ROSPA851013	Oil Seal D851013	except E480,485
21	1	ROSPA901513	Oil Seal D9011513	E480,485
23	1	56000319	Key 1/2x1/2x2.95	E/2E160-26H
23	1	56000321	Key 5/8x5/8x2.95	E/2E370,375
23	1	56000322	Key 3/4x3/4x3.74	E480,485
24	2	RLPAA013040	Spring Pin 13x40	
25	8	RSRAC012120	Hex. Head Screw M12x120, 11T	
26	6	RSRAA010035	Hex. Head Bolt M10x35	
27	1	RLSAA000090	Snap Ring S-90 External	E480,485
28	8	RSNAA000012	Nut, Hex. M12 Type 1	6,11,17:1
28	8	RSNAA000016	Nut, Hex. M16 Type 1	except 6,11,17:1
29	**	RWLBA000012	Spring Washer Disk, PS, M12	
30	8	RWLBA000012	Spring Washer Disk, PS, M12	6,11,17:1
30	8	RWLBA000016	Spring Washer Disk, PS, M16	except 6,11,17:1
31	6	RWSAA000010	Spring Washer M10	
34	4	RSPAA000308	Square Head Plug PT3/8 PG3	
35	2	RSPBB000308	Hex. Headless Plug PT3/8	
56	4	RSSAA010025	Socket Screw M10x25	
57	4	RWADB000010	Lock Washer M10	

C/F - Contact SHIMPO Drives Customer Service

** indicates that these parts must be purchased in sets of this size | ** indicates that the number of items per reducer varies*

SHIMPO DRIVES, INC. • 1701 Glenlake Avenue Itasca, IL 60143 USA • Phone: (630) 924-7138 or (800) 842-1479 • Fax: (630) 924-7382
www.shimpodrives.com • info@shimpodrives.com

Frame Sizes E/2E160-E485 Output Section Parts List

301	1	BERG1531160	Output Flange NE1	"F" Version
301	1	BXEA1531661	Output Flange EX-VE1	"V" Version E/2E160-26H
301	1	BXEA1531671	Output Flange EX-VE2	"V" Version E/2E370,375
307	8	BERA1531181	Stud Bolt M12x138	
308	**	RSNAA000012	Nut M12 Type1	
701	1	C/F	Ring Housing NE1	
707	8	BERB1500080	Stud Bolt M12x82	
708	6	BERA1500080	Stud Bolt M12x160	
712	2	RSSAA012110	Socket Bolt M12x110	

Frame Sizes E/2E160-E485 Output Section:

Exploded View

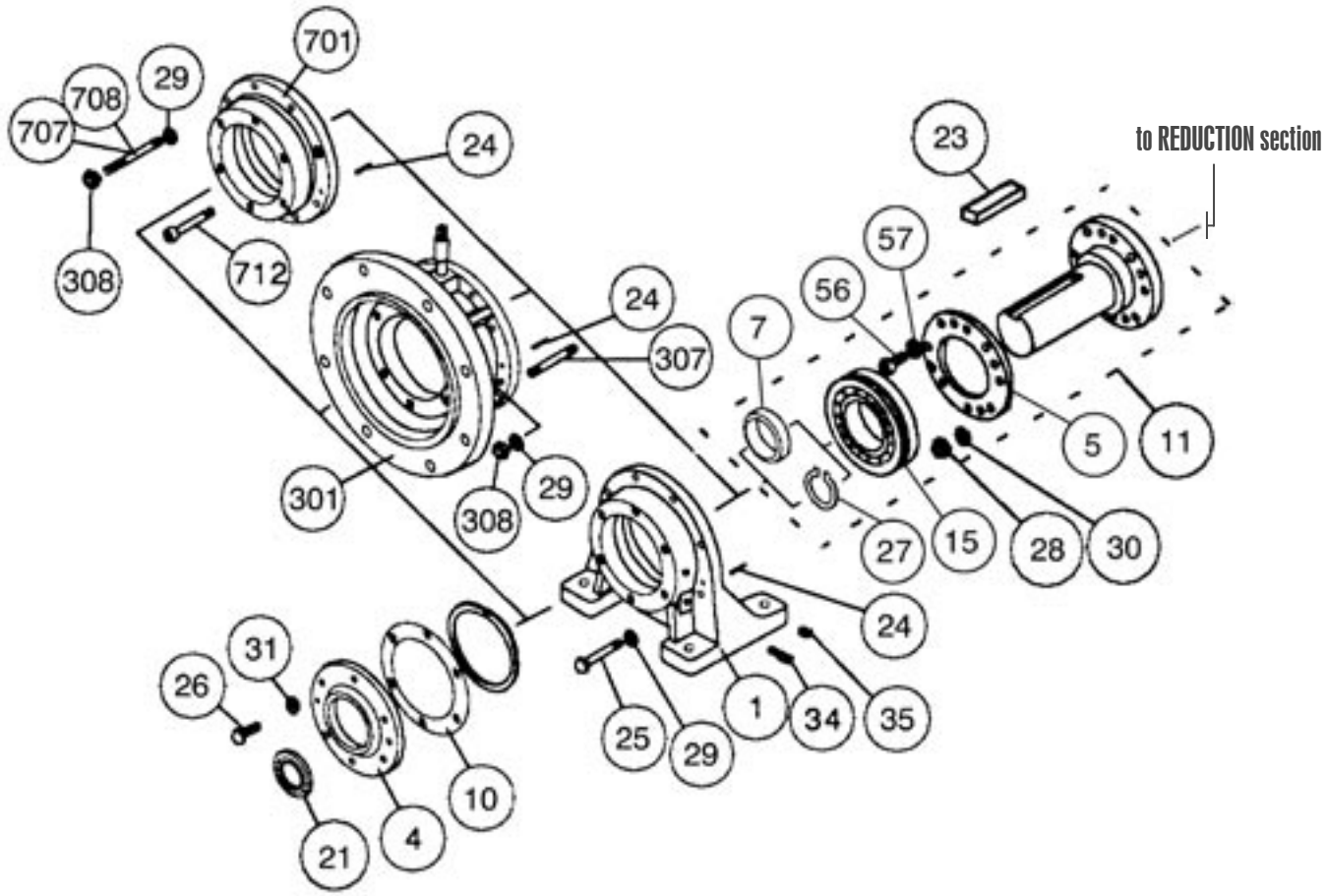

GYROMAX®

Frame Sizes E/2E160-E485 Reduction Section Parts List

ITEM	QTY	PART #	DESCRIPTION	COMMENTS
2	1	BXEB0566020	Pin Housing EX-6E	6:1
2	1	BXEB1566020	Pin Housing EX-8E	8:1
2	1	BNZY1500920	Pin Housing NE1	11,17,35,71:1
2	1	BXEB3566020	Pin Housing EX-13E	13:1
2	1	BXEB4566020	Pin Housing EX-15E	15:1
2	1	BXEB6565020	Pin Housing EX-21,43-87E	21,43,87:1
2	1	BXEB7666020	Pin Housing EX-25E	25:1
2	1	BNZY3500920	Pin Housing NE2	29,59:1
2	1	BNZY5500920	Pin Housing NE3	47:1
2	1	BXEBC566020	Pin Housing EX-51E	51:1
2	1	C/F	Pin Housing Ring Mount	All Ratios
3	1	AERB1500030	Holder with Pins NE1	6,11:1
3	1	AERB2500030	Holder with Pins NE2	17:1
3	1	AERB4500030	Holder with Pins NE3	except 6,11,17:1
8	1	BXEB1500450	Eccentric Spacer A	8,13,15,21,25,43,51,87:1
9	1	BXEB1500460	Eccentric Spacer B	8,13,15,21,25,43,51,87:1
12	2*	BXEB0500220	Wheel EX-6E	6:1
12	2*	BXEB1500220	Wheel EX-8E	8:1
12	2*	BERA1500221	Wheel E1	11:1
12	2*	BXEB3500200	Wheel EX-13E	13:1
12	2*	BXEB4500200	Wheel EX-15E	15:1
12	2*	BERA2500221	Wheel E2	17:1
12	2*	BXEB6500220	Wheel EX-21E	21:1
12	2*	BXEB7500220	Wheel EX-25E	25:1
12	2*	BERA4500221	Wheel E3	29:1
12	2*	BERA3500221	Wheel E4	35:1
12	2*	BXEBA500220	Wheel EX-43E	43:1
12	2*	BERA5500221	Wheel E5	47:1
12	2*	BXEBC500220	Wheel EX-51E	51:1
12	2*	BERA6500221	Wheel E6	59:1
12	2*	BERA7500221	Wheel E7	71:1
12	2*	BXEBF500221	Wheel EX-87E	87:1
13	8	BERA1500230	Wheel Spacer E1	6,11:1
13	1	BXEB1500230	Wheel Spacer EX-8-87E	8,13,15,21,25,43,51,87:1
13	8	BERA2400231	Wheel Spacer E2	17:1
13	8	BERA3500230	Wheel Spacer E3	29,35,47,59,71:1
14	16*	BERB1500360	Bushing E1	6,11,17:1
14	8*	BXEB8500360	Bushing EX-8-87E	8,13,15,21,25,43,51,87:1
14	16*	BERA3500360	Bushing E2	29,35,47,59,71:1
16	**	BERA1500380	Internal Pin E1	6,11,17,29,35,47,59,71:1
16	**	BXEA8500380	Internal Pin EX-8-87E	8,13,15,21,25,43,51,87:1
17	56*	BXEB0500440	Internal Pin Roller EX-6E	6:1
17	**	BXEB1500440	Internal Pin Roller EX-8-47E	8,13,15,21,25,43:1

** indicates that these parts must be purchased in sets of this size | ** indicates that the number of items per reducer varies*

SHIMPO DRIVES, INC. • 1701 Glenlake Avenue Itasca, IL 60143 USA • Phone: (630) 924-7138 or (800) 842-1479 • Fax: (630) 924-7382
www.shimpodrives.com • info@shimpodrives.com

Frame Sizes E/2E160-E485 Reduction Section Parts List

ITEM	QTY	PART #	DESCRIPTION	COMMENTS
18	2*	BERA1500400	Eccentric Bearing E1	6,11:1
18	2*	BXEB1500600	Eccentric Bearing EX-8E	8:1
18	2*	BXEB2500600	Eccentric Bearing EX-11-17E	13,15:1
18	2*	BERA2500400	Eccentric Bearing E2	17:1
18	2*	BXEB6500600	Eccentric Bearing EX-21E	21:1
18	2*	BXEB7500600	Eccentric Bearing EX-25,29E	25:1
18	2*	BERA4500400	Eccentric Bearing E3	29:1
18	2*	BERA3500400	Eccentric Bearing E4	35:1
18	2*	BXEBA500600	Eccentric Bearing EX-43E	43:1
18	2*	BERA5500400	Eccentric Bearing E5	47:1
18	2*	BXEBB500600	Eccentric Bearing EX-47,51,59E	51:1
18	2*	BERA6500400	Eccentric Bearing E6	59:1
18	2*	BERA7500400	Eccentric Bearing E7	71:1
18	2*	BXEBE500600	Eccentric Bearing EX-71,87E	87:1
20	1	RBBCA006015	Ball Bearing 6015ZZ	
33	1	ROGAA025007	Oil Gauge 20x7(mm)	
36	**	RSPBB000308	Hex. Headless Plug PT3/8	
104	1	BERB0203030	Distance Collar NE1	6,11:1 Shaft In, 280TC
104	1	BERB0207030	Distance Collar NE2	Shaft In, 280TC except 6,11:1
105	1	RBRCA002305	Roller Bearing NF2305	6,11:1
105	1	RBRCA002306	Roller Bearing NF2306	except 6,11:1
108	1	RLSAA000028	Snap Ring S-28 External	6,11:1 210TC,250TC
108	1	RLSAA000038	Snap Ring S-38 External	180TC-250TC except 6,11:1

** indicates that these parts must be purchased in sets of this size | ** indicates that the number of items per reducer varies*

Frame Sizes E/2E160-E485 Reduction Section:

Exploded View

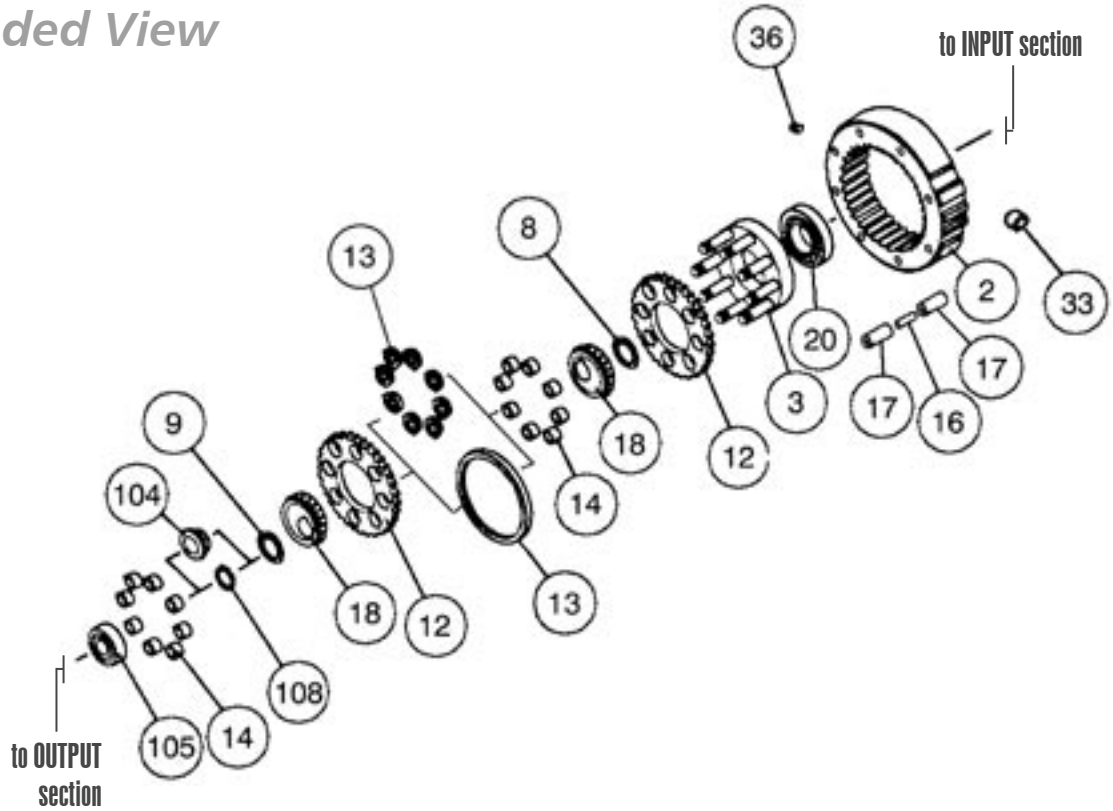

GYROMAX®

Frame Sizes E/2E160-E485 Input Section Parts List

ITEM	QTY	PART #	DESCRIPTION	COMMENTS
6	1	BERA1500050	Spacer E1 11E For Holder	6,11:1
22	1	RLKAA010038	Key 10x8x38 KM7	6,11:1
22	1	RLKAA012058	Key 12x8x58 KM10	except 6,11:1
37	1	SSQBA000304	Breather Plug PT3/4 BC5	
38	1	ROTAA000004	Plug Red 4mmOD Rubber	
51	1	RBBCA006312	Ball Bearing 6312ZZ	180TC-250TC
51	1	RBBCA006215	Ball Bearing 6215ZZ	280TC
53	1	RLSSA000060	Snap Ring S-60 External	180TC-250TC
53	1	RLSSA000075	Snap Ring S-75 External	280TC
63	1	RBBCA006310	Ball Bearing 6310ZZ	
66	2	RLSAA000050	Snap Ring S-50 External	
101	1	BXKG0537020	Motor Flange E1 180TC-210TC	
101	1	BXKG0596020	Motor Flange E2 250TC	
102	1	KNZY5537030	Motor Shaft E5 w/Brg	180TC except 6,11:1
102	1	KNZY1575030	Motor Shaft E1 w/Brg	6,11:1 210TC
102	1	KNZY2575030	Motor Shaft E3 w/Brg	210TC except 6,11:1
102	1	KNZY1591030	Motor Shaft E2 w/Brg	6,11:1 250TC
102	1	KNZY2591030	Motor Shaft E4 w/Brg	250TC except 6,11:1
102	1	KNZY1596030	Motor Shaft E6 w/Brg	6,11:1 280TC
102	1	KNZY2596030	Motor Shaft E7 w/Brg	280TC except 6,11:1
103	1	BERB0107040	Counter Shaft Bushing NE1	6,11:1 Shaft In, 280TC
103	1	BERB0207040	Counter Shaft Bushing NE2	Shaft In, 280TC except 6,11:1
109	1	RLSRA000130	Snap Ring R-130 Internal	
110	1	ROSAA506809	Oil Seal S506809	180TC-250TC
110	1	ROSAC507212	Oil Seal S507212 Acrylic	280TC
111	1	RSIAA000012	EYE BOLT M12	
112	1	RSSAA006016	Socket Screw M6x16	180TC
112	1	RSSAA008016	Socket Screw M8x16	210TC-280TC
113	1	RWSAA000012	Spring Washer M12	
114	1	SOBAA000015	Rubber Plug 15mm Dia. LP2	
201	1	BXEA1500110	Input Bracket E1	
202	1	BERA1500120	Bearing Cover B E1	
203	1	BERA1500130	Fan E1	
204	1	BERA1500140	Fan Cover E1	
205	1	BERB1500550	Gasket at Bearing Cover B E1	
206	1	KNZY1500310	Input Shaft E1 w/Brg	6,11:1
206	1	KNZY2500310	Input Shaft E2 w/Brg	except 6,11:1
217	1	RLSAA000042	Snap Ring S-42 External	
218	1	ROSPA506809	Oil Seal D506809	
219	1	56000315	Key 3/8x3/8x2.36	
221	1	PLKAA012022	Key 12x8x22	
223	4	RSRAA008030	Hex. Head Bolt M8x30	
224	4	RSRAA006010	Hex. Head Bolt M6x10	
227	1	RSTAA008010	Set Screw M8x10 Point	
230	4	RWSAA000008	Spring Washer M8	
231	4	RWSAA000006	Spring Washer M6	

SHIMPO DRIVES, INC. • 1701 Glenlake Avenue Itasca, IL 60143 USA • Phone: (630) 924-7138 or (800) 842-1479 • Fax: (630) 924-7382
www.shimpodrives.com • info@shimpodrives.com

Frame Sizes E/2E160-E485 Input Section:

Exploded View

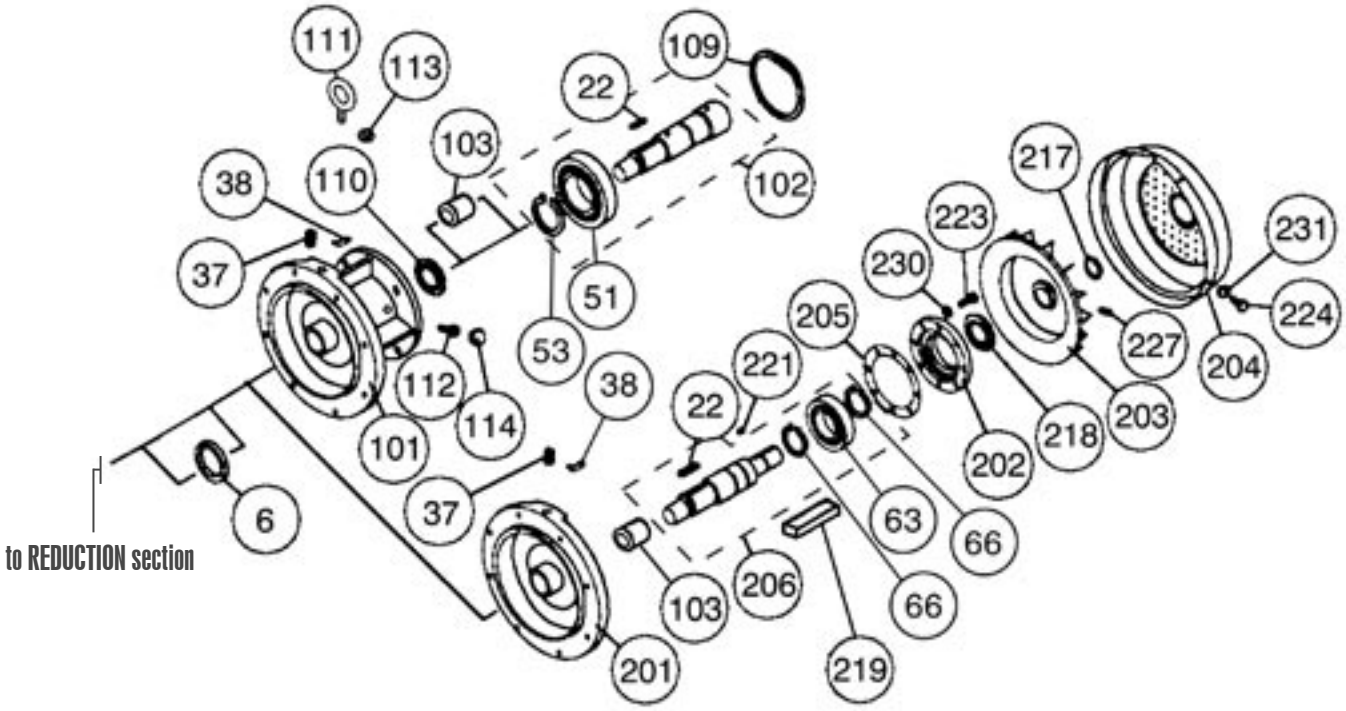

GYROMAX®

Frame Sizes F/2F080-195 Output Section Parts List

ITEM	QTY	PART #	DESCRIPTION	COMMENTS
1	1	BXEA1600820	Base EX-F0	F/2F080,085
1	1	BXEA1600830	Base EX-F1	F/2F190,195
4	1	BERB1600050	Bearing Cover A NF1	
5	1	BERB1600480	Locating Spacer NF1	11,17:1
5	1	BERB4600480	Locating Spacer NF2	29,35,47,59,71:1
5	1	BXEB3700480	Locating Spacer F1	13,15,21,25,43,51,87:1
6	1	BERB1600470	Output Bushing NF1	
7	1	BERB1600540	Gasket at Bearing Cover A NF1	
8	1	KERB2310270	Output Shaft Assy. F01	F080,085 11,17:1
8	1	KXEG2700850	Output Shaft Assy. F51	2F080,085 13,15,21,25,43,51,87:1
8	1	KERB2310280	Output Shaft Assy. F02	F080,085 29,35,47,59,71:1
8	1	KNZY1600840	Output Shaft Assy. F1	F190,195 11,17:1
8	1	KXEG2700860	Output Shaft Assy. F61	2F190,195 13,15,21,25,43,51,87:1
8	1	KNZY4600840	Output Shaft Assy. F2	F190,195 29,35,47,59,71:1
16	1	RBBGA006319	Ball Bearing 6319NR	
16	1	RBBKA006319	Ball Bearing 6319NRDD	Vertical up
18	1	ROSPA104014	Oil Seal D104014	
20	1	56000322	Key 3/4x3/4x3.74	F/2F080,085
20	1	56000323	Key 7/8x7/8x4.53	F/2F190,195
21	2	RLPAA013045	Spring Pin 13x45	
22	8	RSRAC012130	Hex. Head Screw M12x130, 11T	
23	6	RSRAA012045	Hex. Head Bolt M12x45	
25	8	RSNBA000016	Nut, Hex. M16 Type 3	11,17:1
25	8	RSNBA000018	Nut, Hex. M18 Type 3	except 11,17:1
26	**	RWLBA000012	Spring Washer Disk, PS, M12	
27	8	RWLBA000016	Spring Washer Disk, PS, M16	11,17:1
27	8	RWLBA000018	Spring Washer Disk, PS, M18	except 11,17:1
28	6	RWSAA000012	Spring Washer M12	
30	2	RSPAA000308	Square Head Plug PT3/8 PG3	
31	2	RSPAA000308	Square Head Plug PT3/8 PG3	
56	4	RSSAA012025	Socket Screw M12x25	
57	4	RWADB000012	Lock Washer M12	
301	1	BERG1631160	Vertical Flange NF1	"F" Version
301	1	BXEA1631671	Vertical Flange EX-VF2	"V" Version F/2F080,085
301	1	BXEA1631681	Vertical Flange EX-VF3	"V" Version F/2F190,195
307	8	BERA1531181	Stud Bolt M12x138	
308	**	RSNAA000012	Nut M12 Type1	
701	1	C/F	Ring Housing NF1	
707	8	BERB1500080	Stud Bolt M12x82	
708	6	BERA1500080	Stud Bolt M12x160	
712	2	RSSAA012110	Socket Bolt M12x110	

** indicates that these parts must be purchased in sets of this size | ** indicates that the number of items per reducer varies*
C/F - Contact SHIMPO Drives Customer Service

SHIMPO DRIVES, INC. • 1701 Glenlake Avenue Itasca, IL 60143 USA • Phone: (630) 924-7138 or (800) 842-1479 • Fax: (630) 924-7382
www.shimpodrives.com • info@shimpodrives.com

Frame Sizes F/2F080-195 Output Section:

Exploded View

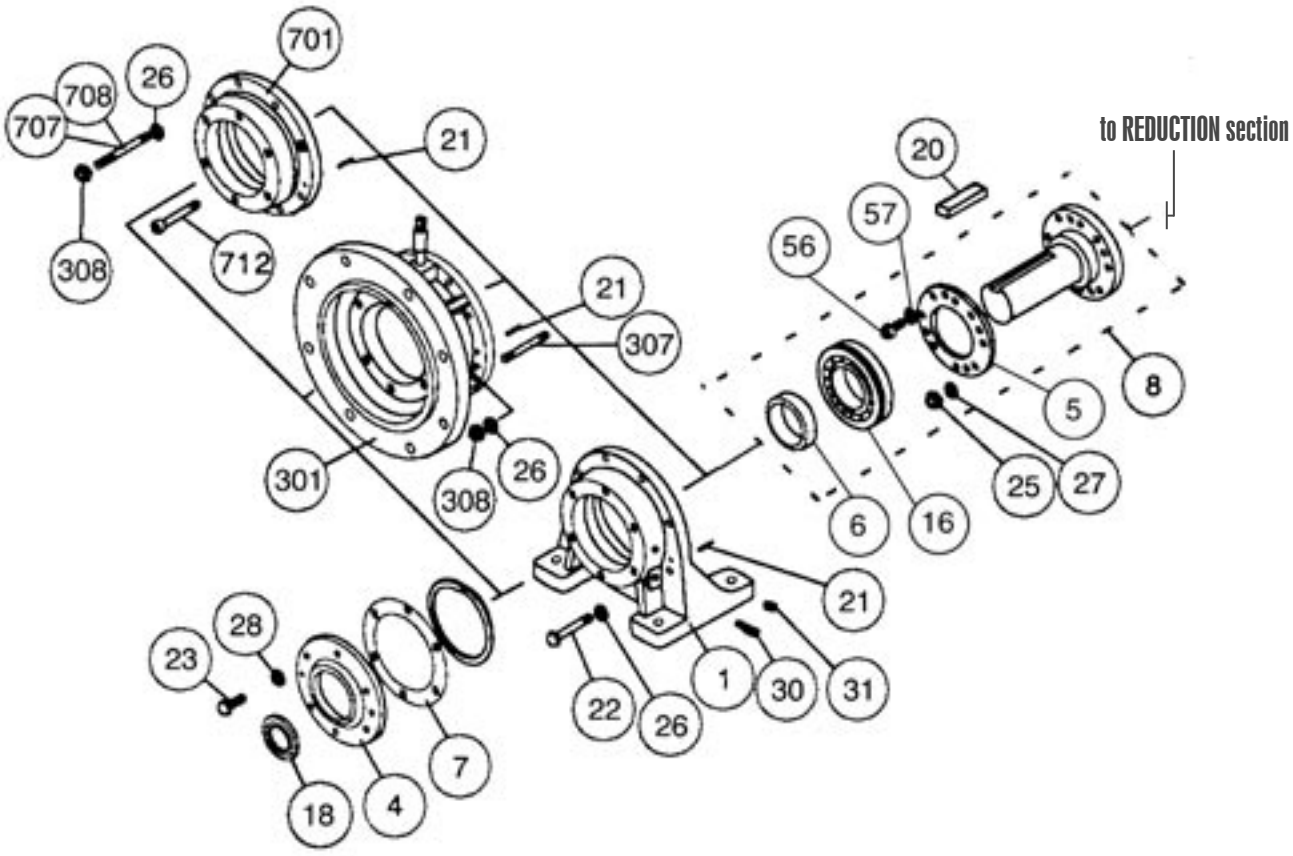

GYROMAX®

Frame Sizes F/2F080-195 Reduction Section Parts List

ITEM	QTY	PART #	DESCRIPTION	COMMENTS
2	1	BNZY1600920	Pin Housing NF1	11,17,35,71:1
2	1	BXEB3766020	Pin Housing EX-13F	13:1
2	1	BXEB4766020	Pin Housing EX-15F	15:1
2	1	BXEB6766020	Pin Housing EX-21,43F	21,43:1
2	1	BXEB7766020	Pin Housing EX-25,51F	25,51:1
2	1	BNZY3600920	Pin Housing NF2	29,59:1
2	1	BNZY5600920	Pin Housing NF3	47:1
2	1	BXEBF766020	Pin Housing EX-87F	87:1
2	1	C/F	Pin Housing Ring Mount	All Ratios
3	1	AERB1600030	Holder with Pins NF1	11,17:1
3	1	AXEB3700030	Holder with Pins EX-11-87F	13,15,21,25,43,51,87:1
3	1	AERB4600030	Holder with Pins NF2	29,35,47,59,71:1
9	2*	BERA1600221	Wheel NF1	11:1
9	2*	BXEB3700220	Wheel EX-13F	13:1
9	2*	BXEB4700220	Wheel EX-15F	15:1
9	2*	BERA2600221	Wheel NF2	17:1
9	2*	BXEB6700220	Wheel EX-21F	21:1
9	2*	BXEB7700220	Wheel EX-25F	25:1
9	2*	BERA4600221	Wheel NF3	29:1
9	2*	BERA3600221	Wheel NF4	35:1
9	2*	BXEBA700220	Wheel EX-43F	43:1
9	2*	BERA5600221	Wheel NF5	47:1
9	2*	BXEBC700220	Wheel EX-51F	51:1
9	2*	BERA6600221	Wheel NF6	59:1
9	2*	BERA7600221	Wheel NF7	71:1
9	2*	BXEBF700221	Wheel EX-87F	87:1
10	8*	BERA3500230	Wheel Spacer E3	11,17:1
10	1	BXEB3700230	Wheel Spacer EX-11-87F	13,15,21,25,43,51,87:1
10	8*	BERA3600230	Wheel Spacer F1	29,35,47,59,71:1
11	16*	BERB3500360	Bushing E2	11,17:1
11	8*	BXEA8600360	Bushing EX-11-87F	13,15,21,25,43,51,87:1
11	16*	BERA3600360	Bushing F1	29,35,47,59,71:1
13	**	BERA1600380	Internal Pin F1	11,17,29,35,47,59,71:1
13	**	BXEB3700380	Internal Pin EX-11-59F	13,15,21,25,43,51:1
13	44*	BXEBF700380	Internal Pin EX-71,87F	87:1
14	**	BXEB3700440	Internal Pin Roller EX-11-59F	13,15,21,25,43,51:1
14	88*	BXEBF700440	Internal Pin Roller EX-71,87F	87:1
15	2*	BERA1600400	Eccentric Bearing F1	11:1
15	2*	BXEB2700600	Eccentric Bearing EX-11-15F	13:1,15:1
15	2*	BERA2600400	Eccentric Bearing F2	17:1
15	2*	BXEB5700600	Eccentric Bearing EX-17,21F	21:1
15	2*	BXEB7700600	Eccentric Bearing EX-25F	25:1
15	2*	BERA4600400	Eccentric Bearing F3	29:1
15	2*	BERA3600400	Eccentric Bearing F4	35:1
15	2*	BXEBA700600	Eccentric Bearing EX-43F	43:1
15	2*	BERA5600400	Eccentric Bearing F5	47:1
15	2*	BXEBC700600	Eccentric Bearing EX-51F	51:1
15	2*	BERA6600400	Eccentric Bearing F6	59:1
15	2*	BERA7600400	Eccentric Bearing F7	71:1
15	2*	BXEBF700600	Eccentric Bearing EX-71,87F	87:1

** indicates that these parts must be purchased in sets of this size | ** indicates that the number of items per reducer varies*

SHIMPO DRIVES, INC. • 1701 Glenlake Avenue Itasca, IL 60143 USA • Phone: (630) 924-7138 or (800) 842-1479 • Fax: (630) 924-7382
www.shimpodrives.com • info@shimpodrives.com

Frame Sizes F/2F080-195 Reduction Section Parts List

ITEM	QTY	PART #	DESCRIPTION	COMMENTS
17	1	RBBCA006216	Ball Bearing 6216ZZ	
32	2	RSPBB000308	Hex. Headless Plug PT3/8	
104	1	BERB0207030	Distance Collar NF1	11,17:1 Shaft In, 280TC/320TC
104	1	BERB4511030	Distance Collar NF2	Shaft In, 280TC/320TC except 11,17:1
105	1	RBRCA002306	Roller Bearing NF2306	11,17:1
105	1	RBRCA002308	Roller Bearing NF2308	except 11,17:1
107	1	RLSAA000048	Snap Ring S-48 External	210TC/250TC except 11,17:1

** indicates that these parts must be purchased in sets of this size | ** indicates that the number of items per reducer varies*

Frame Sizes F/2F080-195 Reduction Section:

Exploded View

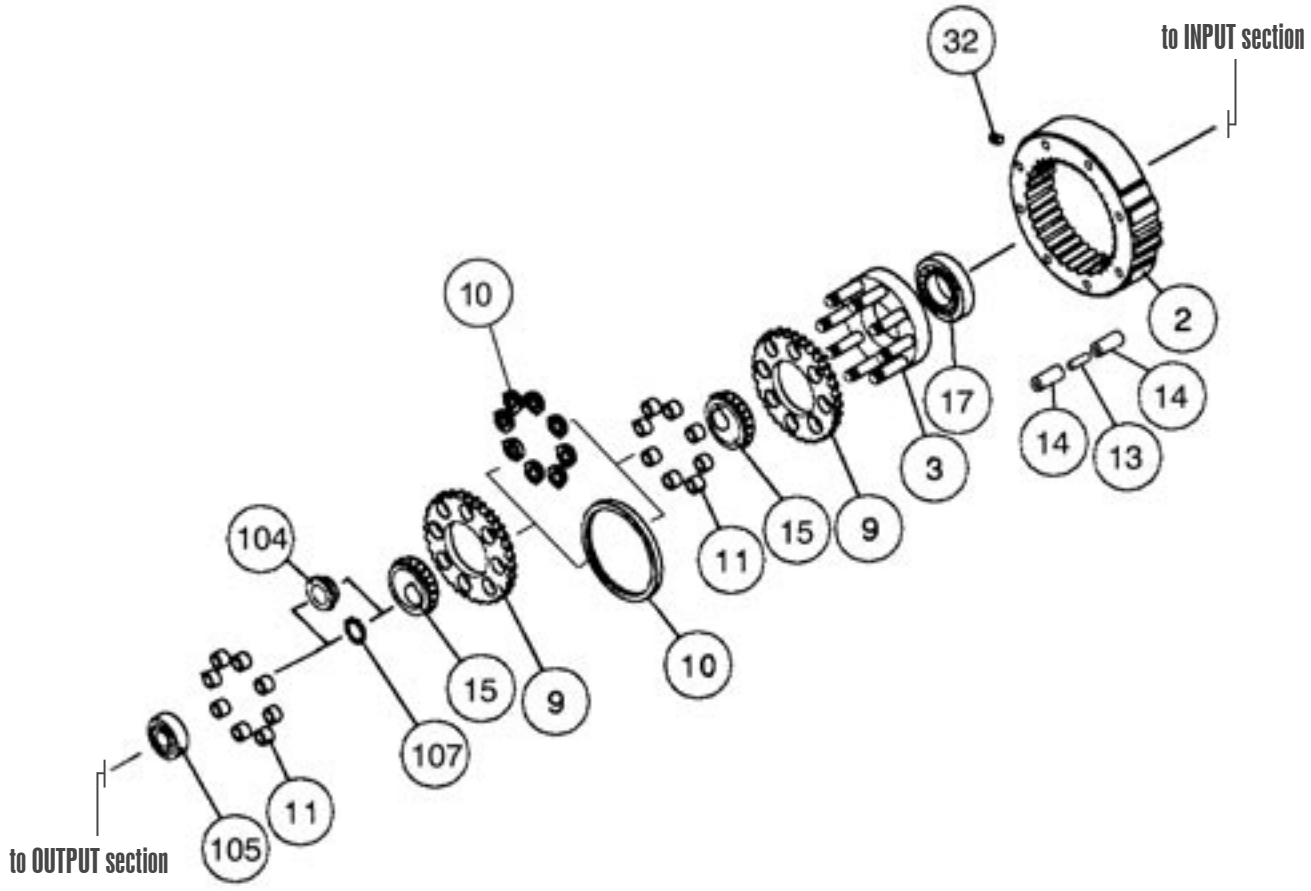

GYROMAX®

Frame Sizes F/2F080-195 Input Section Parts List

ITEM	QTY	PART #	DESCRIPTION	COMMENTS
19	1	RLKAA012058	Key 12x8x38 KM10	11,17:1
19	1	RLKAA015058	Key 15x10x58 KM12	except 11,17:1
33	1	SSQBA000304	Breather Plug PT3/4 BC5	
34	1	ROTAA000004	Plug Red 4mmOD Rubber	
51	1	RBBCA006312	Ball Bearing 6312ZZ	210TC/250TC
51	1	RBBCA006215	Ball Bearing 6315ZZ	280TC
51	1	RBBCA006218	Ball Bearing 6218ZZ	320TC
53	1	RLSSA000060	Snap Ring S-60 External	210TC/250TC
53	1	RLSSA000075	Snap Ring S-75 External	280TC
53	1	RLSSA000090	Snap Ring S-90 External	320TC
63	1	RBBCA006312	Ball Bearing 6312ZZ	
66	2	RLSAA000060	Snap Ring S-60 External	
101	1	BXKG0775020	Motor Flange F1 210TC/250TC	
101	1	BXKG0796020	Motor Flange F2 280TC	
101	1	BXKG0798020	Motor Flange F3 320TC	
102	1	KNZY5675030	Motor Shaft F4 w/Brg	210TC except 11,17:1
102	1	KNZY1695030	Motor Shaft F1 w/Brg	11,17:1 250TC
102	1	KNZY3691030	Motor Shaft F3 w/Brg	250TC except 11,17:1
102	1	KNZY1696030	Motor Shaft F2 w/Brg	11,17:1 280TC
102	1	KNZY4696030	Motor Shaft F5 w/Brg	280TC except 11,17:1
102	1	KNZY1698030	Motor Shaft F6 w/Brg	11,17:1 320TC
102	1	KNZY4698030	Motor Shaft F7 w/Brg	320TC except 11,17:1
103	1	BERB0111040	Counter Shaft Bushing NF1	11,17:1 Shaft In, 280TC/320TC
103	1	BERB4511040	Counter Shaft Bushing NF2	Shaft In, 280TC/320TC except 11,17:1
108	1	RLSAA000048	Snap Ring S-48 External	
109	1	RLSRA000130	Snap Ring R-130 Internal	210TC-280TC
109	1	RLSRA000160	Snap Ring R-160 Internal	320TC
110	1	ROSAA608212	Oil Seal S608212	210TC-280TC
110	1	ROSAC608212	Oil Seal S608212 Acrylic	320TC
111	1	RSIAA000012	EYE BOLT M12	
112	1	RSSAA006014	Socket Screw M6x14	210TC
112	1	RSSAA008014	Socket Screw M8x14	250TC/280TC
112	1	RSSAA010025	Socket Screw M8x17	320TC
113	1	RWSAA000012	Spring Washer M12	
114	1	SOBAA000015	Rubber Plug 15mm Dia. LP2	
201	1	BXEB0700110	Input Bracket F1	
202	1	BERA1600120	Bearing Cover B F1	
203	1	BERA1600130	Fan F1	
204	1	BERA1600140	Fan Cover F1	
205	1	BERB1600550	Gasket at Bearing Cover B F1	
206	1	KNZY1600310	Input Shaft F1 w/Brg	11,17:1
206	1	KNZY3600310	Input Shaft F2 w/Brg	except 11,17:1
218	1	ROSPA608212	Oil Seal D608212	
219	1	56000319	Key 1/2x1/2x2.95	
221	1	PLKAA014022	Key 14x9x22	
223	4	RSRAA008035	Hex. Head Bolt M8x35	
224	4	RSRAA006010	Hex. Head Bolt M6x10	
227	1	RSTAA008010	Set Screw M8x10 Point	
230	4	RWSAA000008	Spring Washer M8	
231	4	RWSAA000006	Spring Washer M6	

SHIMPO DRIVES, INC. • 1701 Glenlake Avenue Itasca, IL 60143 USA • Phone: (630) 924-7138 or (800) 842-1479 • Fax: (630) 924-7382
www.shimpodrives.com • info@shimpodrives.com

Frame Sizes F/2F080-195 Input Section:

Exploded View

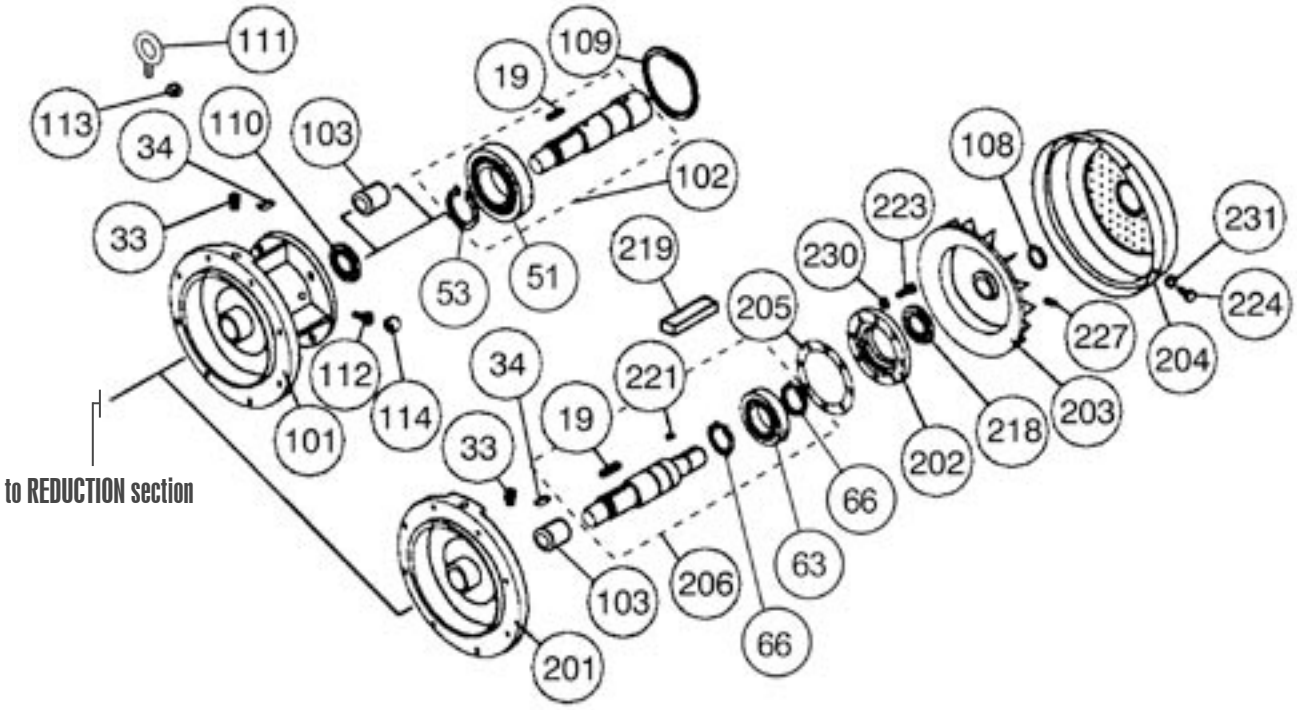

GYROMAX®

Frame Sizes 2I205-2L235/2DI205-2EL235 Parts List

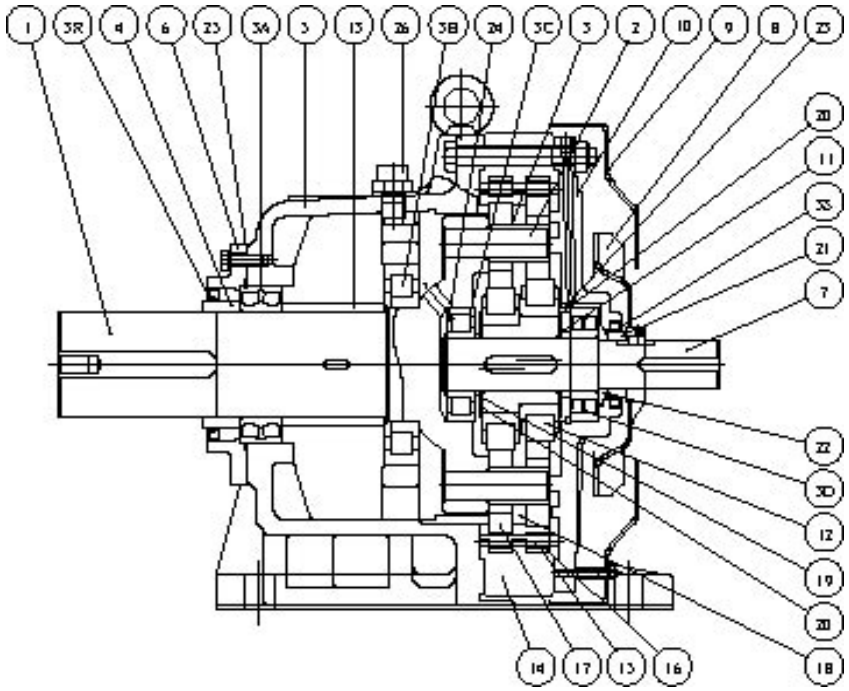

Main Parts

NO	QTY	DESCRIPTION
1	1	Output Shaft
2	8	Carrier Pin
3	8	Bushing
4	1	Output Bushing
5	1	Base
6	1	Bearing Cover
7	1	Input Shaft
8	1	Fan
9	1	Fan Cover
10	1	Input Holder
11	1	Input Collar
12	2	Eccentric Bearing
13	1	Distance Collar
14	1	Internal
15	**	Internal Pin
16	**	Internal Pin Roller
17	2	Wheel
18	1	Wheel Spacer
19	1	Collar A
20	1	Collar B
21	1	Input Bushing
22	1	Plate
23	1	R Snap Ring
24	1	S Snap Ring
25	1	Seal Packing
26	1	Breather
3R	1	Oil Seal
3A	1	Spherical Roller Bearing
3B	1	Roller Bearing
3S	1	Oil Seal
3C	1	Roller Bearing
3D	1	Spherical Roller Bearing

*** number of items per ratio varies*

Output Section Bearings

FRAME SIZES		BEARING PART NUMBERS	
SINGLE REDUCTION	DOUBLE REDUCTION	3A	3B
2I205	2DI205	22220BNRC2	NUP222C2
2J215	2DJ215, 2EJ215	23022BNRC2	NUP224C2
2K225	2DK225, 2FK225	23024BNRC2	NUP226C2
2L235	2EL235	23026BNRC2	NUP228C2

Input Section Bearings

FRAME SIZES		BEARING PART NUMBERS	
SINGLE REDUCTION	DOUBLE REDUCTION	3C	3D *
2I205	2DI205	NJ310E	21311
2J215	2DJ215, 2EJ215	NJ311E	21311
2K225	2DK225, 2FK225	NJ312E	21312
2L235	2EL235	NJ313E	21314

** Contact Shimpo Drives Customer Service for BEARING PART NUMBERS for Double Reduction*

Oil Seals

FRAME SIZES	3R (OUTPUT SECTION)			3S * (INPUT SECTION)
	OIL SEAL PART NUMBER	HORIZONTAL QTY	VERTICAL DOWN QTY	OIL SEAL PART NUMBER
2I205	D12015516	1	2	S708812
2J215	D13016014	1	2	S7510013
2K225	D14517514	1	2	S7510013
2L235	D16019016	1	2	S8511013

** Contact Shimpo Drives Customer Service for Oil Seal Part Numbers for Double Reduction*

SHIMPO DRIVES, INC. • 1701 Glenlake Avenue Itasca, IL 60143 USA • Phone: (630) 924-7138 or (800) 842-1479 • Fax: (630) 924-7382
www.shimpodrives.com • info@shimpodrives.com

Troubleshooting

CONDITION	PROBLEM	POSSIBLE CAUSE	SOLUTION
Load does not rotate	Drive motor not operating	Overload tripped	Reset the overload. If condition continues, check the motor and reducer sizing.
		Defective drive motor	Remove the motor from the reducer and apply power. Replace if it does not operate properly.
	Input jammed	Improper input drive train alignment or assembly	Check all portions of the input drive assembly for proper alignment and smooth operation.
	Reducer input shaft not driven	Broken or missing key	Inspect the keys on all input drive shafts.
		Defective input drive train	Inspect all input drive components for proper assembly and operation. Check the tension and condition of any input drive belts.
	Output mechanical problems	Broken or missing key	Inspect the keys on all output drive shafts.
		Defective output drive train	Check all portions of the output drive assembly for proper alignment and smooth operation.
		Worn load components	Disconnect the reducer from the driven load. Operate it using the drive motor. Check for smooth, quiet operation. Disassemble and repair the reducer if required.
	Overload	Load too large for the motor/reducer combination	Compare the see of the drive train with the see of the load. If necessary, replace with a larger motor/reducer combination. For an existing application, consider any changes that might have increased the load.
		Worn load components	Inspect all load components for damage or wear. Replace or repair as needed.
	Damaged reducer	Damaged reducer components	Disconnect the reducer from the driven load. Operate it using the drive motor. Check for smooth, quiet operation. Disassemble and repair the reducer, if required.
Load does not reach full speed	Drive motor turning too slowly	Motor overloaded	Check motor current to see if it is overloaded. Repair the cause of the overload or replace with a larger motor/drive combination.
		Motor connected to wrong power source	Compare the voltage and frequency of the power source to the motor's nameplate.
		Adjustable speed drive is too slow	If the motor is driven by an adjustable speed drive, ensure that it is operating properly.
		Incorrect motor	Check the motor's nameplate for proper speed rating.
	Incorrect reducer selected	Reducer ratio too high	Replace the reducer with one having a smaller ratio. It may be necessary to change the sizes of the motor, the reducer, or both.
Unusual noise	Damaged components	Damaged motor	Disconnect the motor and drive it separately. Replace if necessary.
		Damaged or misaligned drive train components	Check all drive train components for proper alignment and operation. Replace as necessary.
		Damaged reducer	Disconnect the reducer from the load and operate it. If necessary, disassemble and repair. Look for external causes of the damage.
	Vibration	Loose mounting	Check all mounting bolts and all reducer body bolts for tightness.
	Improper lubrication	Improper reducer lubrication type or quantity	Lubricate the reducer according to factory specifications.
Excessive temperature	Excessive load	Overload	Check the motor current to detrermine if the drive is overloaded. Reduce the load or crease the motor/reducer size.
		Input/output misalignment or excessive overhung/thrust load	Check all input and output connections for proper alignment.
	Improper cooling	Restricted air flow	Inspect motor and reducer tans for proper air flow. Clean as required. Be sure that the reducer is in an area where air can flow freely around it.
	Improper ambient temperature	Ambient temperature is not in the range from 32°F to 104 °F	Contact Shimpo Drives.
	Improper lubrication	Improper reducer lubrication type or quantity	Lubricate the reducer according to factory specifications.
	Mechanical damage	Reducer damaged	Disassemble and repair the reducer as required.
Lubricant leaks	Excessive internal pressure	Plugged oil breather	Be sure that the oil breather is installed and functioning properly.
	Damaged or loose components	Damaged oil seals	Inspect all oil seals. Replace if necessary.
		Loose reducer body joints	Inspect all body joints for leaks. Tighten all body bolts. If necessary, disassemble the reducer and replace the gaskets.
		Cracked reducer body	Inspect the reducer for cracked body parts. Disassemble and replace as needed.
Vibration	Excessive input speed	Gyromax input shaft is being driven at more than 1750 rpm	Reduce the imput speed. Contact Shimpo Adrives if an input speed greater than 1750 rpm is required.
	Improper assembly	The eccentrics are aligned in the same direction	Disassemble the reducer and ensure that the eccentrics are mounted opposite to each other.
	Improper mounting	Loose mounting bolts or structure or improper alignment of connected equipment	Ensure that the reducer is firmly mounted to a rigid base. Check the alignment of devices connected to the reducer's input and output.
	Damage	Internal damage to the reducer	Disassemble and inspect all reducer parts, particularly bearings.

The Complete Line of Shimpo Drives Products

Adjustable Speed Drive

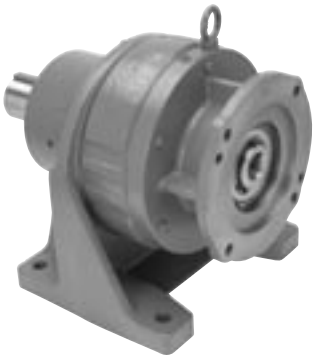

Speed Reducer

Reduced Backlash Speed Reducer

Overhead Conveyor Speed Reducer

Servo Planetary Gear Reducer

Top Mount Adaptor Reducer

DISTRIBUTED BY:

GYRO.003.0403

SHIMPO

A Nidec Group Company

SHIMPO DRIVES, INC. • Itasca, IL 60143 USA • Phone: (630) 924-7138 • (800) 842-1479 • Fax: (630) 924-7382
www.shimpodrives.com • info@shimpodrives.com