Nidec

Autorator®

Closed-Loop Speed Control

Instruction Manual

Models

LAB-3_-2-__-_

and

LUB-3_-2-__-_

NIDEC DRIVE TECHNOLOGY CORPORATION

DESCRIPTION OF MODEL NUMBER

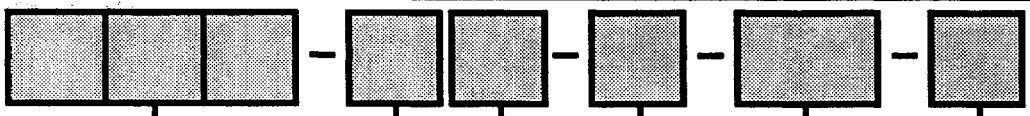

Mounting Type

LAB	Door-Mount
LUB	Chassis Mount

Line Voltage

3	115 V AC, single phase
Note:	Some versions of this control in countries outside of the United States are designed for different line voltages. These will have a different digit in this position.

Feedback Type

A	Magnetic Sensor Feedback
B	AC Tach Generator Feedback
C	Potentiometer Feedback
D	Rotary Encoder Feedback
H	Current Feedback

Control Version

2	This manual only deals with version 2 of the Autorator "LAB/LUB" controls.

Speed Range (of the adjustable speed section, before any speed reducers)

NRX	0 - 600 rpm
RX	0 - 1,000 rpm
RXC	0 - 800 rpm

Options

0	No Options Installed
1	4 - 20 mA Signal Follower
2	Alarm Output
3	4 - 20 mA Follower and Alarm Output
4	Speed Arrival Output
5	4 - 20 mA Follower and Speed Arrival Output
6	Alarm Output and Speed Arrival Output
7	4 - 20 mA Follower, Alarm Output, and Speed Arrival Output

In this manual, an underline in place of a portion of a model number will indicate that the information applies equally well to all controls with any letter in that position. For example, the model number L_B-3A-2-RXC-0 indicates that the information applies equally well to model numbers LAB-3A-2-RXC-0 and LUB-3A-2-RXC-0.

INTRODUCTION

The Autorator speed control is used to control the output speed of the RXC Adjustable Speed Drive. A complete speed control system consists of:

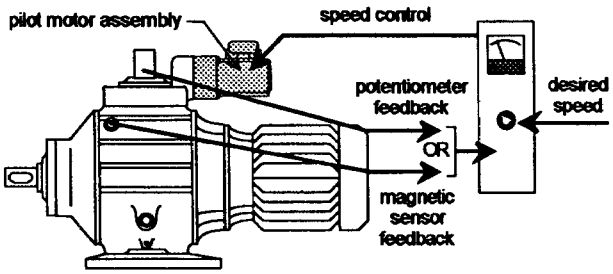

- an RXC Adjustable Speed Drive with drive motor
- a control cover for the RXC drive which contains a single-phase, reversible pilot motor
- a feedback device mounted on the RXC drive. This is generally either a magnetic sensor and 60-tooth sensing gear or a potentiometer which is mounted on top of the control cover
- an Autorator closed-loop speed control

The desired speed is set through the use of a 1 kΩ potentiometer or an external 0 to 10 V DC signal. When the optional signal follower is installed, the Autorator can also follow an external 4 to 20 mA DC speed reference signal.

The Autorator continually compares the input speed reference signal with a feedback signal from the drive. When a significant error between these two signals is detected, it makes the pilot motor shift the position of the control ring in the RXC drive to correct the error.

WARRANTY

The Company warrants the Autorator Closed Loop Speed Control to be free from defects in materials and workmanship under normal use and proper maintenance for a period of one year. If within such period any product shall be proved to the Company's reasonable satisfaction to be defective, such product shall be repaired or replaced at the Seller's option. The Company's obligation and the Buyer's exclusive remedy hereunder shall be limited to such repair or replacement and shall be conditioned upon the Company receiving written notice of any alleged defect no later than 10 days after its discovery within the warranty period and, at the Company's option, the return of such product to the Company, transportation charges prepaid, when such return is feasible. The Company reserves the right to satisfy its warranty obligation in full by reimbursing the Buyer for all payments made and the Buyer shall thereupon return the product to the Company. Products manufactured by others and supplied by the Company as part of the Company's product are not warranted by the Company and the Buyer's sole recourse shall be under the warranty, if any, of such other manufacturer.

These warranties shall not be effective if the product has been subject to overload, misuse, negligence or accident, nor if the product has been repaired or altered outside of our factory or authorized service station in any respect which in our judgment adversely affects its condition or operation.

THE FOREGOING WARRANTIES ARE EXCLUSIVE AND IN LIEU OF ALL OTHER EXPRESS AND IMPLIED WARRANTIES (EXCEPT OF TITLE, INCLUDING BUT NOT LIMITED TO IMPLIED WARRANTIES OF MERCHANTABILITY, FITNESS FOR A PARTICULAR PURPOSE, PERFORMANCE, OR OTHERWISE), and in no event shall the Company be liable for claims (based upon breach of express or implied warranty, negligence, or otherwise) for any other damages, whether direct, immediate, incidental, foreseeable, consequential, or special.

INSPECTION

Unpack the control and check to see that it is identical with what is specified on the purchase order. Check its model number using the chart on the inside front cover of this manual. Inspect for shipping damage. Notify the shipping agent immediately if any damage is discovered.

INSTALLATION

LOCATION

This speed control is designed to be mounted in a clean, dry location. If the control position will be wet, dusty, or exceptionally dirty, the Autorator control should be mounted inside an enclosure to protect it.

DIMENSIONS

The diagrams on the next page show the mounting dimensions for these system interface controls.

Controls whose model number begins with "LA" are door mount controls. These are designed to be mounted through a cutout in an operator's panel.

Mounting Dimensions, Door Mount Style, Model Numbers Beginning with LA

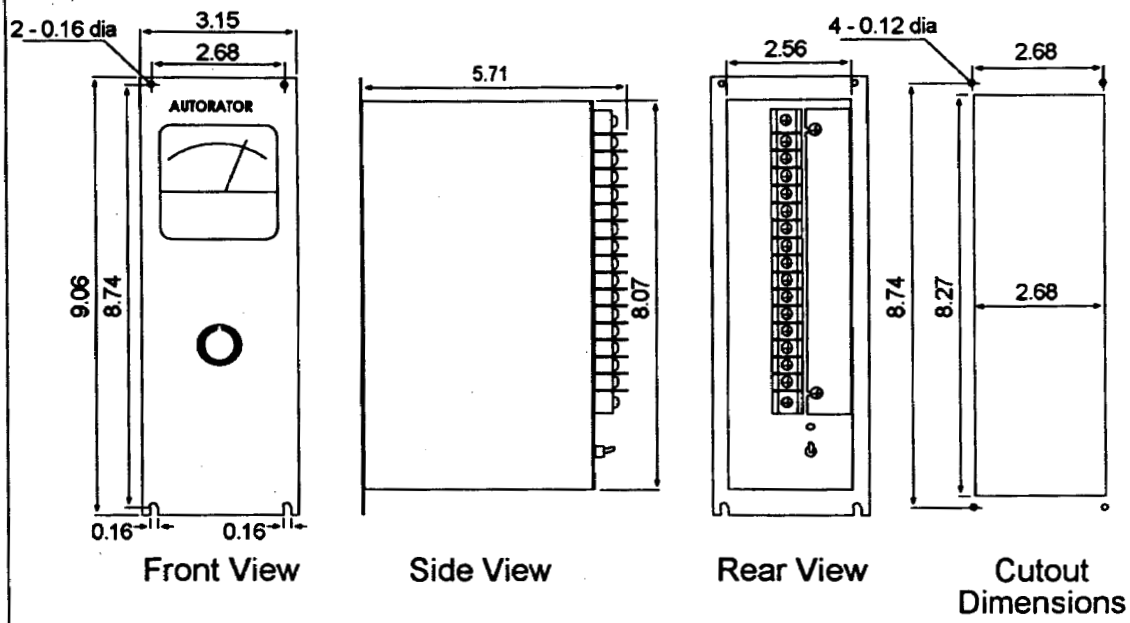

Mounting Dimensions, Chassis Mount Style, Model Numbers Beginning with LU

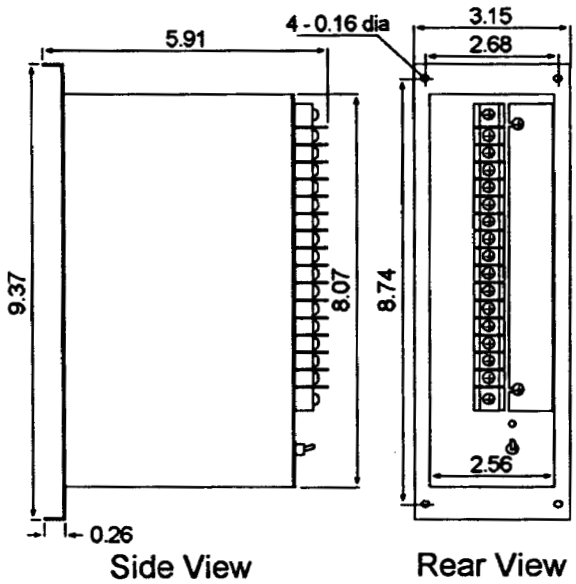

All dimensions are in inches.
Subject to change without notice.

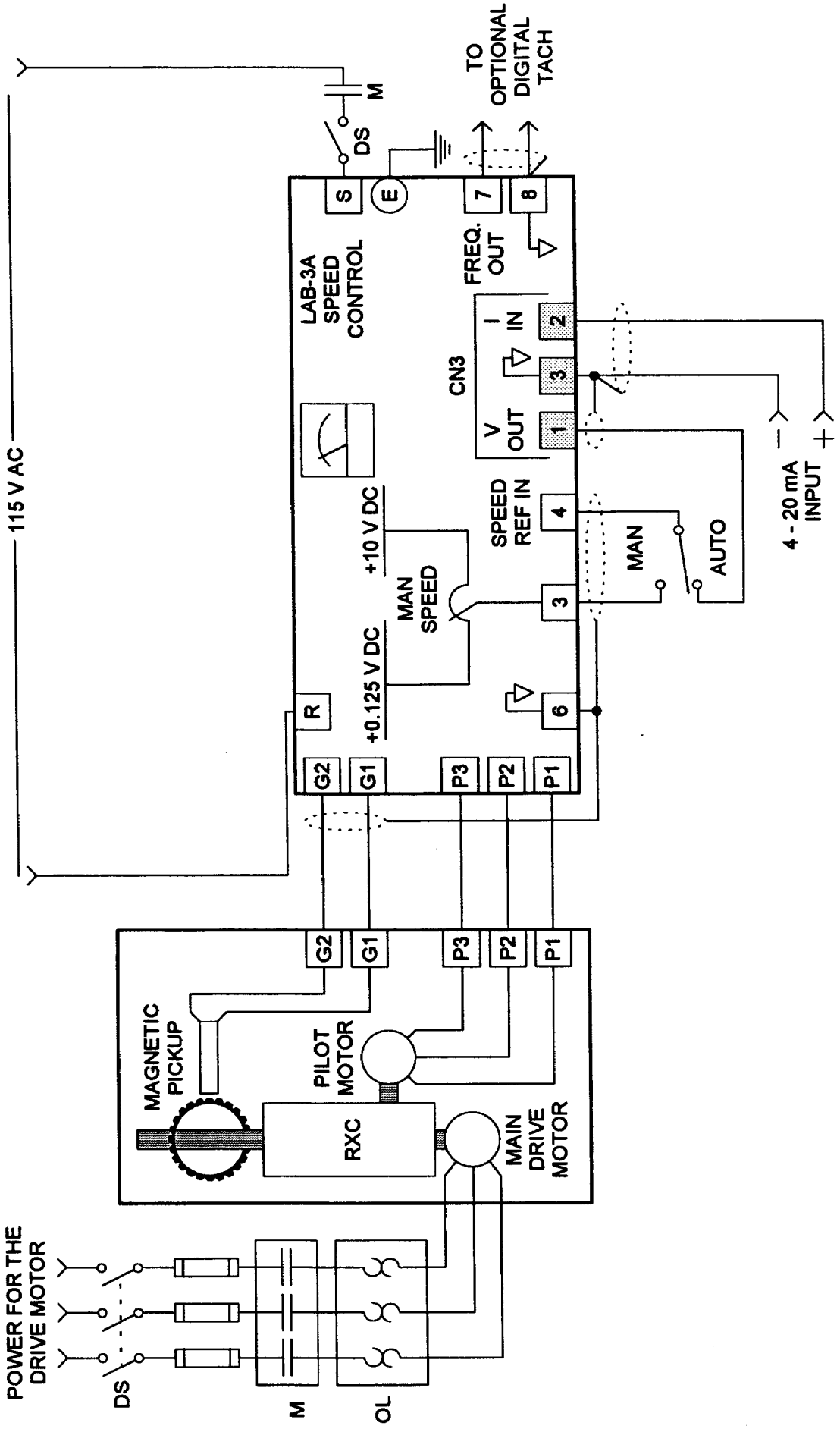

Wiring Diagram: Door Mount Control with Magnetic Sensor Feedback and Optional Signal Follower

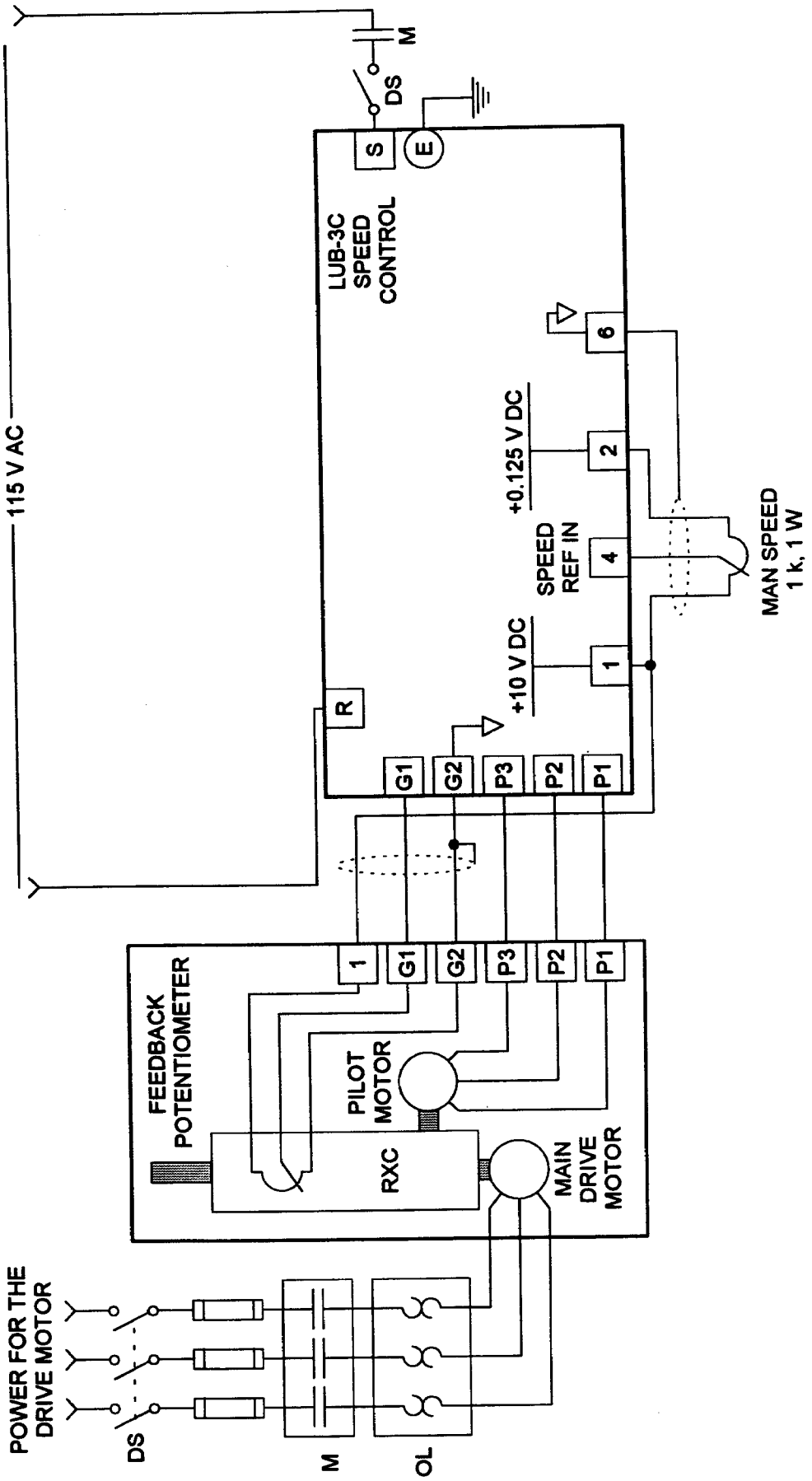

Wiring Diagram: Chassis Mount Control with Potentiometer Feedback

Controls whose model number begins with "LU" are chassis mount controls. These are designed to be mounted inside a control enclosure. Operator's controls, when necessary, are mounted separately and wired to the interface control using its terminal strip.

WIRING

1. Typical wiring diagrams are provided on pages 6 and 7 of this manual. These will be appropriate for the majority of applications. Contact the factory for specialized requirements.

2. Wiring must be done in compliance with all applicable national and local electrical codes. Recommended minimum wire sizes are listed below.

Wire to Terminal	Recommended Minimum Wire Size (AWG)
E	14
R, S, P1, P2, P3	16
G1, G2, 1 - 8	20

3. The maximum length of the wires to the Autorator control are shown below.

Wire to Terminal	Recommended Maximum Wire Length (ft)
G1, G2, P1 - P3	160
1 - 8	65

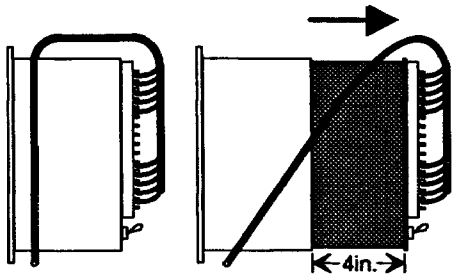

4. The circuit board is designed to slide out of the enclosure. This simplifies adjustments and trouble shooting. In order to take advantage of this feature, be sure to provide enough slack in the wiring to allow the board to slide out four inches.

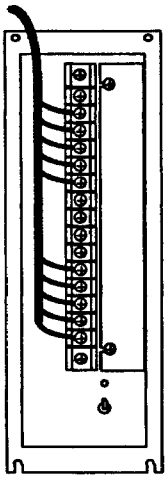

5. Wires should be connected so that they extend to the left side of the terminal strip. In this way they will not cover the potentiometers, switches, and LEDs to the right of the terminal strip.

6. Line power for this control is wired to terminals R and S. This should be wired so that power is removed from the control when it is disconnected from the drive motor.

7. The wiring to terminals G1, G2, and 1 through 8 carries low voltage signals. These must be shielded to prevent the introduction of electrical noise. The shield at *one* end of each cable should be connected to circuit common, as indicated in the wiring diagrams. Circuit common for these controls is provided at terminals 6 and 8. At the other end of the cable, the shield *must* be insulated so that it cannot come into electrical contact with other components or with ground. **DO NOT CONNECT BOTH ENDS OF THE SHIELD.**

8. Electrical common on this control is not connected to earth ground. Therefore, signal isolators are seldom needed to prevent ground loop noise problems.

OPERATION

The LAB-3_-2-__-_ is a door mount control. It is designed to be mounted in an operator's panel. It has a single operator's control. This is a manual speed potentiometer that is mounted on the front panel. Turning this fully counter-clockwise makes the control shift the RXC drive to it minimum speed. Most often, this speed will be slightly greater than 0 rpm. The front panel also has an analog speed meter that displays the value of the feedback signal

The LUB-3_-2-__-_ is a chassis-mount control. It is designed to be mounted inside a cabinet. Operator's controls, if required, are mounted separately. Common operator's controls for such a configuration include a manual speed potentiometer and an AUTO/MANUAL switch. The exact types of controls and their layout depend on the requirements of the specific speed control system.

Minimum speed is pre-set to provide the maximum operating speed range. Maximum speed can be adjusted using the FEEDBACK potentiometer.

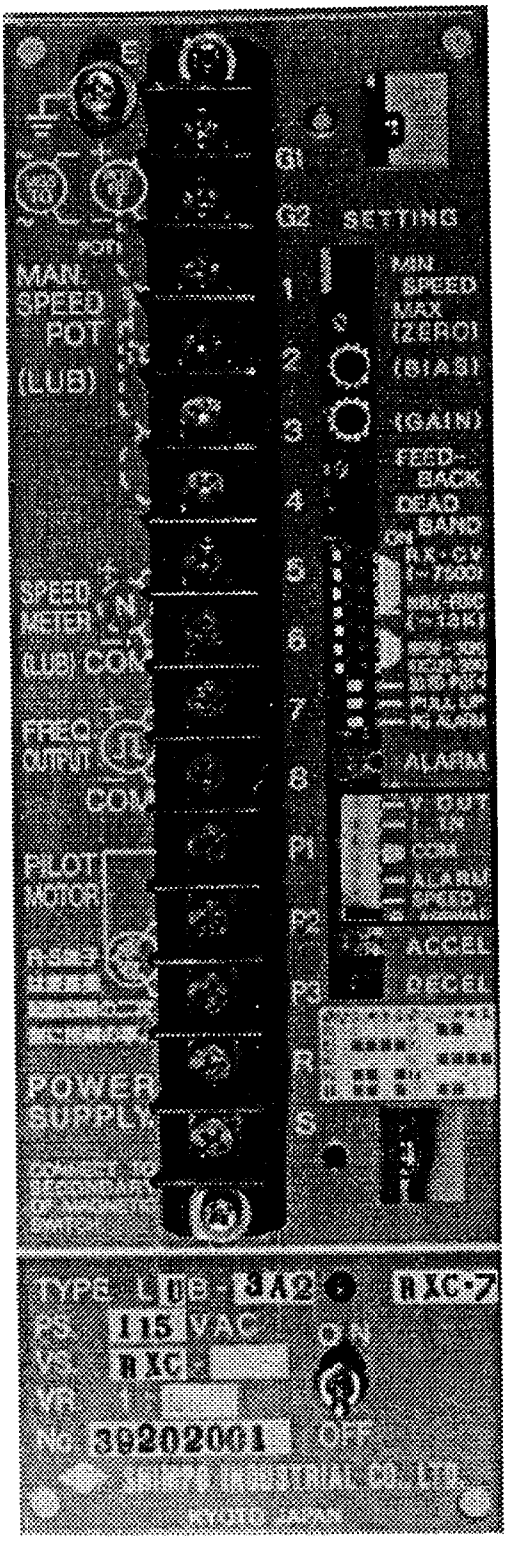

Optional Connector CN3

Terminal Strip Panel of the Autorator Control

DESCRIPTION OF TERMINALS

G1 FEEDBACK INPUT

This is one of two terminals that is used for the speed feedback signal. Of the following feedback sources, the magnetic sensor feedback is the most common.

Magnetic Sensor Feedback

The wire from terminal G1 in the terminal box on the pilot motor connects here. This could be either wire from the magnetic sensor.

Potentiometer Feedback

The wiper of the feedback potentiometer connects here.

Rotary Encoder Feedback

The positive signal lead from the rotary encoder lead is connected here. If the rotary encoder has an open collector output, a positive power supply voltage in the range of 4.75 to 13 V DC at 40 mA must be provided. This must be provided by an external power supply.

Tach Generator

Either lead from an AC tachometer voltage generator is connected here.

4 - 20 mA Feedback

The positive lead of the 4 - 20 mA signal source connects here. The input resistance for this circuit is 250 Ω.

G2 FEEDBACK INPUT

This is the other terminal that is used to provide a feedback signal. Of the following feedback sources, the magnetic sensor feedback is the most common.

Magnetic Sensor Feedback

The wire from terminal G2 in the terminal box on the pilot motor connects here. This could be either wire from the magnetic sensor.

Potentiometer Feedback

The low side of the feedback potentiometer connects here. In this case, this terminal is connected to circuit common.

Rotary Encoder Feedback

The negative signal lead from the rotary encoder lead is connected here. In this case, this terminal is connected to circuit common.

Tach Generator

Either lead from an AC tachometer voltage generator is connected here.

4 - 20 mA Feedback

The negative lead of the 4 - 20 mA signal source connects here. In this case, this terminal is connected to circuit common.

1 SPEED POTENTIOMETER HIGH

This terminal is connected to a +10 V DC, 25 mA power supply. This is normally used to provide power to the high side of the speed potentiometer. On the door mount version of this control, this is internally connected to the front-panel speed potentiometer through connector CN1-5. For potentiometer feedback control systems, the high side of the feedback potentiometer also connects here.

2 SPEED POTENTIOMETER LOW

This terminal is used for connecting the low side of the speed potentiometer. It is normally wired internally to a buffered power supply that provides +0.125 V DC. This ensures that the minimum speed is set at 10 rpm. On the door mount version of this control, this is internally connected to the front-panel speed potentiometer through connector CN1-4.

3 SPEED POTENTIOMETER WIPER

On the door mount version of this control, this is internally connected to the wiper of the front panel speed potentiometer through connector CN1-4. On the chassis-mount version of this control, this is not connected.

4 SPEED REFERENCE INPUT

This terminal is used to connect the speed reference signal to the control. On the door mount control, a jumper is used to connect this to terminal 3. ***This jumper should be removed*** if an external speed reference source is used.

5 SPEED METER

This terminal provides a 0 to +10 V DC signal whose voltage is proportional to the actual operating speed of the drive. A maximum of 5 mA is available at this terminal. On the door mount version of the control, this is internally connected to the front-panel speed meter through connector CN1-2.

6 COM

This terminal is used as the common connection for the speed signal at terminal 5. It is also used as circuit common for external speed reference signals. On the door mount version of the control, this is internally connected to the front-panel speed meter through connector CN1-1.

7 FREQ. OUTPUT

This terminal provides an output signal whose frequency is proportional to the output speed of the drive. The frequency of this signal (in Hz) is equal to the speed (in rpm) of the adjustable-speed shaft of the RXC, before any speed reducers. This is generally used to provide a signal to a digital tachometer. When the PULL UP switch is ON, the output at this terminal is a train of voltage pulses. When the PULL UP switch is OFF, this is an "open collector", switched output. The open collector output is rated for a maximum open circuit voltage of 28 V DC and a maximum closed-circuit current of 20 mA.

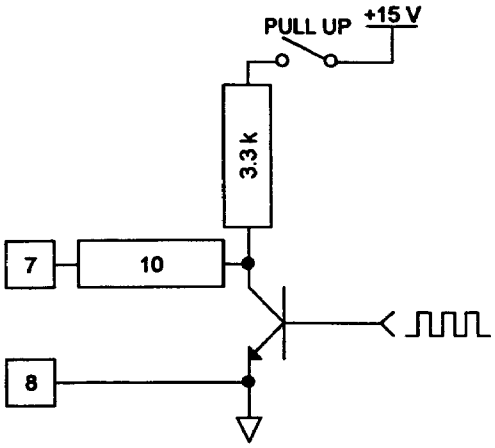

8 COM

This terminal is used as the common connection for the frequency output signal at terminal 5. It can also be used in any other case when a connection to circuit common is required.

P1 PILOT MOTOR COMMON

This terminal is wired to the common terminal of the pilot motor. It is internally connected to the 115 V AC power source through terminal R.

P2 PILOT MOTOR DECELERATE

This terminal is connected to the 115 V AC power connected to terminal S when the speed of the drive is to be decreased quickly. It is also pulsed ON and OFF quickly when a slow speed shift rate is required to either increase or decrease the speed of the drive. When power is applied to the terminal, the DECEL LED also lights.

P3 PILOT MOTOR ACCELERATE

This terminal is connected to the 115 V AC power connected to terminal S when the speed of the drive is to be increased quickly. It is also pulsed ON and OFF quickly when a slow speed shift rate is required to either increase or decrease the speed of the drive. When power is applied to the terminal, the ACCEL LED also lights.

R INPUT POWER COMMON

The control's power switch switches this leg of the power. Fuse F1, a 5 A, 250 V fuse, is also in this power leg.

S INPUT POWER

This is for connecting one lead of the 115 V AC power source for the control. The control's power switch switches this leg of the power. Fuse F1, a 5 A, 250 V fuse, is also in this power leg. This should be wired so that power is removed from this terminal when the drive motor is stopped

DESCRIPTION OF CONTROLS, INDICATORS AND OPTIONAL CONNECTIONS

MIN SPEED

Most controls *do not* have this potentiometer installed. On most controls the minimum speed available from the manual speed potentiometer is internally set to provide the maximum speed range.

This potentiometer is *only* installed in controls like the potentiometer-feedback control. It is used to adjust the minimum speed of the drive when the manual speed potentiometer is set fully counter-clockwise. It has no effect on the drive's minimum speed when it is controlled by an external 0 to 10 V DC source or by the control's 4 - 20 mA follower.

MAX (ZERO)

This potentiometer is *only* installed on controls that have the optional 4 to 20 mA signal follower. It is factory set and generally requires no adjustment by the customer.

This potentiometer is not installed on controls that do not have the optional 4 to 20 mA signal follower. Maximum speed on these controls is set using the FEEDBACK potentiometer.

For information on how to adjust this potentiometer, see the "Adjustment Procedure for Controls with the Optional 4 - 20 mA Signal Follower" section of this manual.

(BIAS)

This potentiometer is *only* installed on controls that have the optional 4 to 20 mA signal follower. It is used to adjust the signal follower so that the 4 mA signal provides the desired minimum operating speed. It is factory set and generally requires no adjustment by the customer.

For information on how to adjust this potentiometer, see the "Adjustment Procedure for Controls with the Optional 4 - 20 mA Signal Follower" section of this manual.

(GAIN)

This potentiometer is *only* installed on controls that have the optional 4 to 20 mA signal follower. It is used to adjust the signal follower so that the 20 mA signal provides the desired maximum operating speed. It is factory set and generally requires no adjustment by the customer.

For information on how to adjust this potentiometer, see the "Adjustment Procedure for Controls with the Optional 4 - 20 mA Signal Follower" section of this manual.

FEEDBACK

This potentiometer is used to adjust maximum speed of the drive. It does this by controlling the gain of the feedback circuit. To adjust it, set the speed reference signal to maximum and adjust this to obtain the desired maximum speed.

NOTE: This potentiometer has no effect on the speed of the drive if switch CS-8 is ON.

DEAD BAND

This potentiometer is not installed on any standard controls. The dead band of the control is already pre-set for optimum control and drive performance.

DIP SWITCHES

The next item on the control is a bank of 10 DIP switches. These are numbered from 1 to 10, with 10 being the switch on the top. To turn a switch ON, flip it to the right, away from the terminal strip. The following table shows the appropriate position for each switch for the three standard speed ranges for RX drives. These speed ranges refer to the speed of the adjustable speed section of the RX drive, before any output speed reduction.

IMPORTANT: The following chart is provided to help you determine if these switches are in the proper positions. Changing the speed range of your control may also require changing some resistors on the control's circuit board. If you need to change the speed range of your control, contact Shimpo Drives and request a copy of Technical Report number 072792, "Set-Up for the New LAB and LUB Controls with Magnetic Sensor Feedback".

	Speed Range		
Item	0 - 600 rpm	0 - 800 rpm	0 - 1000 rpm
CS-10	OFF	OFF	ON
CS-9	OFF	OFF	ON
CS-8	OFF	OFF	ON
CS-7 (size 02 - 96)	ON	ON	ON
CS-7 (sizes 97 & 98)	OFF	OFF	
CS-6	ON	OFF	OFF
CS-5	ON	OFF	OFF
CS-4	OFF	OFF	OFF

SW3 — 50/60 POT I

The maximum speed that the RXC Adjustable speed drive can produce depends on the speed of its drive motor. When the drive motor is connected to a 50 Hz power source, the maximum speed from the drive is 5/6 of its maximum speed when a 60 Hz power source is used. SW3 is used to compensate for this speed range difference. When a magnetic sensor or rotary encoder is used as the feedback signal, turning this switch OFF sets up the control for 50 Hz operation. Turning this switch ON sets up the control for 60 Hz operation. This switch should be left ON when potentiometer or current feedback is used, regardless of the power line 's frequency.

SW2 — PULL UP

This switch determines the nature of the signal produced at terminals 7 and 8. When this switch is ON, the output at this terminal is a train of voltage pulses. When this switch is OFF, the output is an "open collector", switched output. The open collector output is rated for a maximum open circuit voltage of 28 V DC and a maximum closed-circuit current of 20 mA.

SW1 – PG ALARM DISABLE

When this switch is OFF, a loss in the pulsed output signal from either a magnetic sensor of rotary encoder will trip the ALARM circuit. This will keep the pilot motor from being shifted from its present position. If this switch is ON, a loss of the feedback signal will cause the drive to shift to maximum speed. When potentiometer or current feedback is used, this switch should be ON.

ALARM LED

This LED lights to indicate that the control has been shut down by its safety circuitry. In this case the pilot motor will not shift and the drive will not change speed, regardless of any changes in the speed reference signal. This could happen as the result of two situations:

When magnetic sensor or rotary encoder feedback is used and switch SW1 is OFF, a loss of the speed feedback signal will cause the control to stop shifting the drive. To see if this is the cause of the ALARM, turn SW1 (PG ALARM DISABLE) ON. If the ALARM LED goes out, determine why the feedback signal is being lost. If the ALARM LED stays lighted, see the next paragraph.

The Autorator control has a built-in timer function that protects the pilot motor. If it takes more than 4 minutes and 33 seconds (or 5 minutes and 27 seconds when the control is connected to 50 Hz AC power) for the drive to reach the desired operation speed, the ALARM circuit will trip, stopping any additional power from being sent to the pilot motor. This can be reset by turning the control OFF and then back ON. The timer will also automatically reset itself if the desired speed and the actual operating speed match.

OPTIONAL CONNECTOR

The optional six pin connector (CN3) below the ALARM LED is not provided with all controls. It is used to provide connection points for the following options:

4 to 20 mA signal follower
ALARM output signal
SPEED ARRIVAL output signal

Connections are made to this terminal through a mating connector.

CN3-1 — V. OUT

This is the output voltage from the optional 4 to 20 mA signal follower. When the control is to follow a 4 to 20 mA speed reference signal, this output is connected to terminal 4 on the terminal strip.

CN3-2 — I. IN

This is the connector for the positive lead of the 4 to 20 mA speed reference signal. The input impedance of this circuit is 250 Ω.

CN3-3 AND CN3-4 — COM

These are circuit common for all inputs and outputs on the optional connector. They are the same circuit common as is provided on terminals 6 and 8 of the terminal strip.

CN3-5 — ALARM

This optional output is provided by a switching transistor. When the alarm is OFF, the transistor conducts. When the alarm is ON, the transistor opens the external circuit. It is also an open circuit if power to the control is lost. This output is rated for a maximum current of 20 mA and a maximum open-circuit voltage of 28 V DC.

CN3-6 — SPEED ARRIVAL

This optional output is provided by a switching transistor. This is an open circuit as long as the desired speed and the actual speed do not match. The transistor conducts when the actual speed is within the dead band of the desired operating speed. This output is rated for a maximum current of 20 mA and a maximum open-circuit voltage of 28 V DC.

ACCEL LED

This LED lights constantly when the actual speed of the drive's adjustable speed shaft (before any speed reducers) is more than 60 rpm below the desired speed. It indicates that power is being applied to the pilot motor through terminals P1 and P3. This LED will also blink ON and OFF when the actual speed is between 5 and 60 rpm either above or below the desired operating speed. Both the ACCEL and the DECEL LEDs will be OFF when the actual speed of the drive is within ±5 rpm of the desired operating speed. No shifting of the pilot motor takes place in this "dead band" range. Both the ACCEL and DECEL LEDs will also be OFF when the control's ALARM function is tripped.

DECEL LED

This LED lights constantly when the actual speed of the drive's adjustable speed shaft (before any speed reducers) is more than 60 rpm above the desired speed. It indicates that power is being applied to the pilot motor through terminals P1 and P2. This LED will also blink ON and OFF when the actual speed is between 5 and 60 rpm either above or below the desired operating speed. Both the ACCEL and the DECEL LEDs will be OFF when the actual speed of the drive is within ±5 rpm of the desired operating speed. No shifting of the pilot motor takes place in this "dead band" range. Both the ACCEL and DECEL LEDs will also be OFF when the control's ALARM function is tripped.

POWER LED

This LED, which is located directly above the ON/OFF switch of the control, indicates that power has been applied to the control.

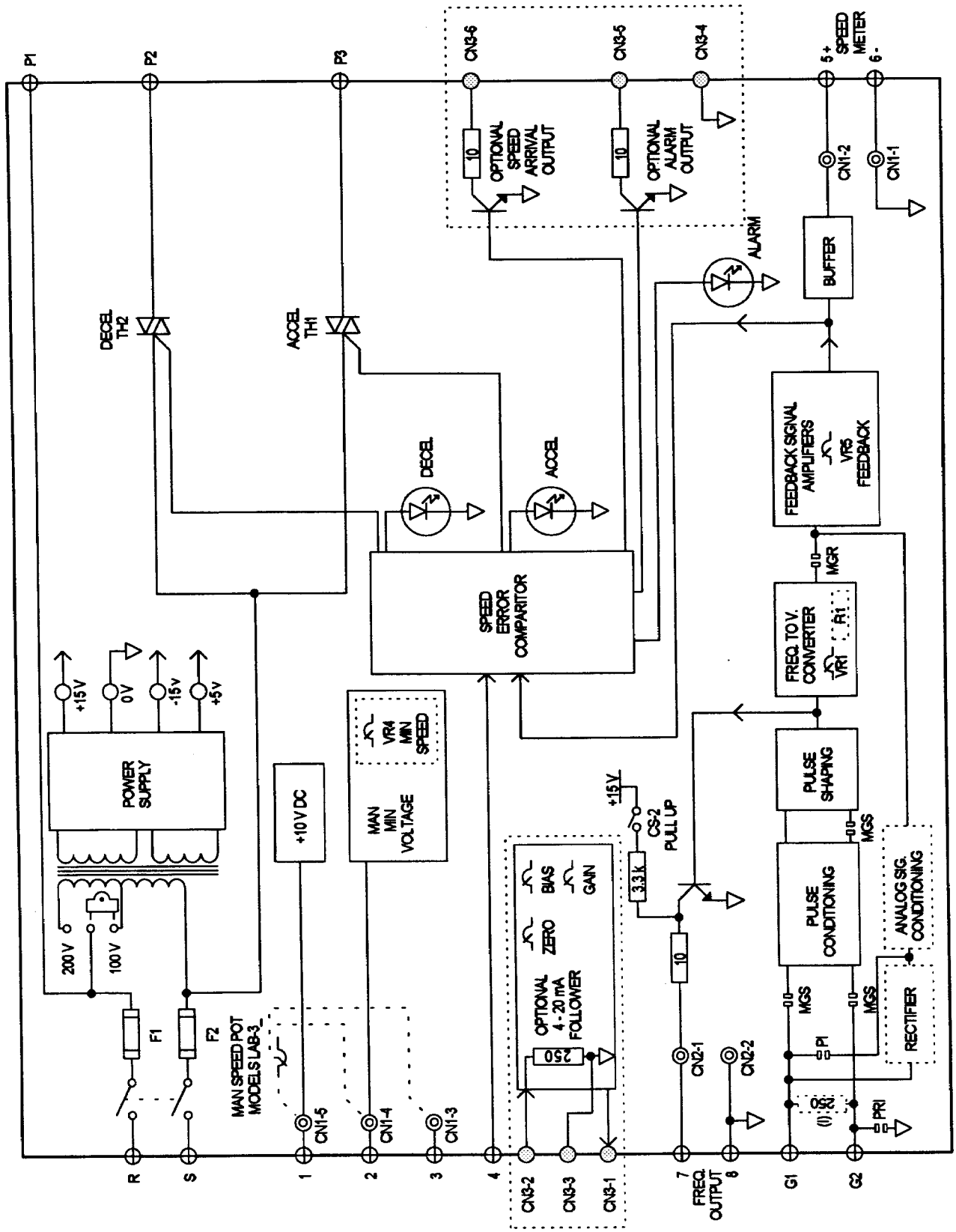

Control Block Diagram

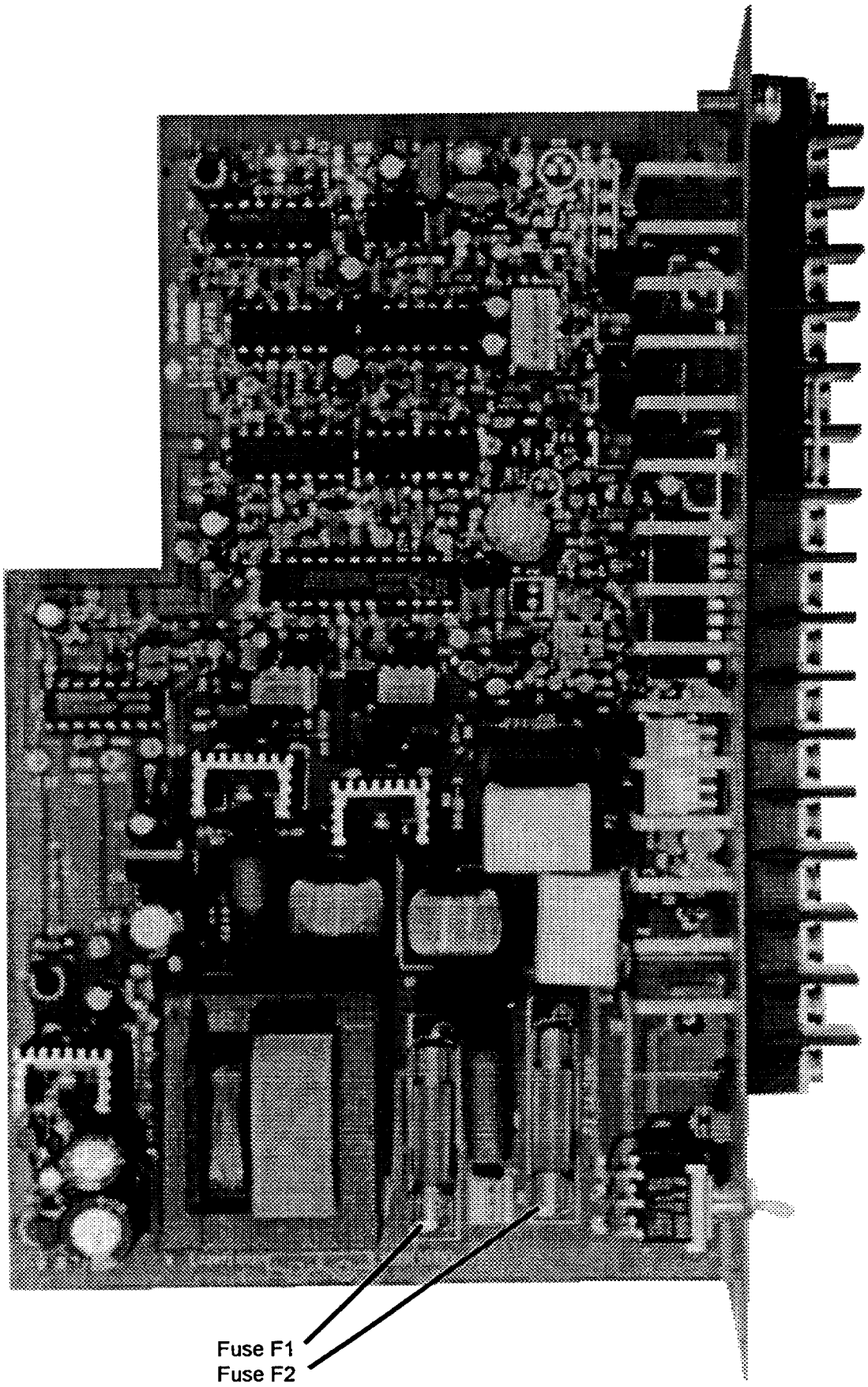

Autorator Circuit Board

THEORY OF OPERATION

The Autorator is a closed-loop speed control that is used to control the speed of an RXC Adjustable Speed Drive.

The desired operating speed is set via a 0 to 10 V DC voltage that is applied at terminal 4. For the door mount control, a front-panel 1 kΩ potentiometer is internally wired to an internal 10 V DC power supply. The wiper of this potentiometer is wired to terminal 3. The control comes with a jumper installed between terminal 3 and 4. An external 1 kΩ potentiometer or an external 0 to 10 V DC speed reference can also be used. When the optional 4 to 20 mA signal follower is installed, a 4 to 20 mA speed reference signal can also be used. The control converts this current signal into a separate 0 to 10 V DC output so that it is easy to use this in conjunction with an AUTO/MANUAL switch.

The feedback signal can be provided in a number of ways.

The most common is through the use of a magnetic sensor and 60-tooth sensing gear, which are installed in the RXC drive. The signal from this is connected to terminal G1 and G2. This signal is amplified and shaped. A square wave output is provided at terminal 7. This is generally used to drive a digital tachometer. The amplified and shaped frequency signal is converted into an analog voltage by a frequency-to-voltage converter. The rotary encoder feedback option works in much the same way.

The other common feedback method uses a potentiometer that is mounted to the top of the drive. The position of this potentiometer is determined by the position of the RXC's control ring. This provides a 0 to approximately 3 V DC signal at terminal G1. The tachometer generator and current feedback options operate in much the same way.

The analog feedback signal is then amplified. The FEEDBACK potentiometer controls the gain of this amplifier. Maximum speed is determined by adjusting the gain of this circuit so that its output is 10 V DC when the desired maximum speed is reached. The output from this amplifier is provided at terminal 5. This 0 to 10 V DC signal is used by the door-mount Autorator controls to drive the front panel speed meter. It can also be used by other equipment to determine the actual operating speed of the RXC drive.

The analog speed reference signal and the analog feedback signal are compared. The output from this comparator controls a two-frequency cycloconverter as follows:

If the feedback signal is a lot lower than the speed reference signal (more than 60 rpm slow at the RXC's adjustable speed shaft for magnetic sensor feedback controls):

Triac TH1 will turn ON completely. This will provide 115 V AC, 60 Hz to terminal P3, making the pilot motor shift the drive quickly to a higher speed. The ACCEL LED will also turn on.

If the feedback signal is slightly lower than the speed reference signal (between 5 and 60 rpm slow at the RXC's adjustable speed shaft for magnetic sensor feedback controls):

Triacs TH1 and TH2 will be pulsed ON and OFF to provide 7.5 Hz to the pilot motor, shifting it slowly. Both the ACCEL and DECEL LEDs will blink ON and OFF. This slow shift rate ensures that there will be minimal sifting overshoot.

If the feedback signal is very close to the speed reference signal (between 5 rpm slow and 5 rpm fast at the RXC's adjustable speed shaft for magnetic sensor feedback controls):

The control will provide no power to shift the pilot motor. Neither the ACCEL nor the DECEL LED will light. This "dead band" is provided to ensure that the pilot motor will not be required to shift continuously.

If the feedback signal is slightly higher than the speed reference signal (between 5 and 60 rpm fast at the RXC's adjustable speed shaft for magnetic sensor feedback controls):

Triacs TH1 and TH2 will be pulsed ON and OFF to provide 7.5 Hz to the pilot motor, shifting it slowly. Both the ACCEL and DECEL LEDs will blink ON and OFF. This slow shift rate ensures that there will be minimal sifting overshoot.

If the feedback signal is a lot higher than the speed reference signal (more than 60 rpm fast at the RXC's adjustable speed shaft for magnetic sensor feedback controls):

Triac TH1 will turn ON completely. This will provide 115 V AC, 60 Hz to terminal P2, making the pilot motor shift the drive quickly to a lower speed. The DECEL LED will also turn on.

The ALARM circuit of the control provides two functions. In both cases, when the ALARM circuit is tripped the control will no longer provide power to shift the pilot motor.

If the control is unable to shift the drive to reach the control's dead band within 4 minutes and 33 seconds (5 minutes and 27 seconds when the control is powered from a 50 Hz power source), the control's timer circuit trips the ALARM circuit and keeps the pilot motor from being driven by the control. This can be reset by either momentarily removing power from the control or by changing either the feedback signal or the speed reference signal to bring the error into the control's dead band.

For magnetic sensor and rotary encoder feedback controls, the PG ALARM function can also trip the ALARM function. When the PG ALARM DIP switch is ON, a loss of the pulse signal from the feedback device will trip the ALARM function and keep the control from shifting the drive. When the PG ALARM switch is OFF, a loss of the feedback signal from the drive is interpreted by the control as too low of an output speed. The control will then shift the drive to maximum speed in an attempt to correct the detected speed error. The PG ALARM function only operates when magnetic sensor or rotary encoder feedback is used.

Operation with an Ext. 0–10 VDC Signal

To prevent possible electronic lockup when using with an external 0-10 VDC signal (not a speed pot) at the basic speed range of 10-800 RPM (output shaft of the RXC unit without speed calculations for any gearing options), the minimum speed reference signal **must be** at least .125 VDC.

TROUBLESHOOTING

Most control problems are the result of wiring problems. Before continuing with the following troubleshooting procedures, check the following:

1. Be sure that all wires are connected to the correct terminals.
2. Be sure that all connections are clean and solid.
3. When a cable must be shielded, be sure that the shield is terminated at only one end. The shield should be insulated at the other end so that is cannot make electrical contact.
4. Be sure that power is applied to the control and the POWER ON LED is lighted.
5. Check all external signal sources and devices to ensure that they are operating properly.

Pilot Motor Testing

The pilot motor is a 115 V AC reversible single phase motor. When 115 V AC power is applied between terminals P1 and P2, it shifts the RXC drive to reduce its output speed. When 115 V AC power is applies to terminals P1 and P3, it shifts the RXC drive to increase its output speed. Problems with lack of speed control that occur during start-up of the drive and control may be the result of improper wiring to the pilot motor.

If a problem with the pilot motor wiring is suspected, it should first be tested to determine which lead is P1. To do this:

1. Be sure that power is removed from the Autorator control.
2. Disconnect wires P1, P2 and P3 from the terminal strip.
3. Measure the resistance between pairs of wires. The resistance between P2 and P3 will be twice the resistance between the other two combinations of wires. The remaining wire is therefore P1.

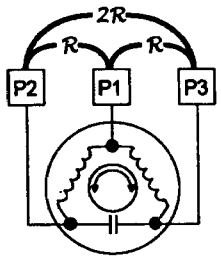

4. Connect P1 temporarily to terminal R. Connect one of the other wires to terminal S.
5. Apply power to the control and the drive motor.
   a. If the pilot motor shifts the RXC drive to a lower output speed, the wire connected to terminal S is P2.
   b. If the pilot motor shifts the RXC drive to a higher output speed, the wire connected to terminal S is P3.
   c. If the pilot motor doesn't shift the drive, remove power from the control and repeat steps 4 and 5 using the other pilot motor lead. If the pilot motor still doesn't shift the drive, either the wiring to the pilot motor is defective, the pilot motor is defective, or the RXC drive's shifting mechanism is jammed. The stub shaft on the control cover of the RXC drive can be manually turned while the control is OFF to check to see if the shifting mechanism can shift freely.
6. Once the pilot motor leads have been identified, remove power from the control and connect them to the proper terminals on the Autorator control.

TROUBLESHOOTING FLOW CHART -- SHEET 1

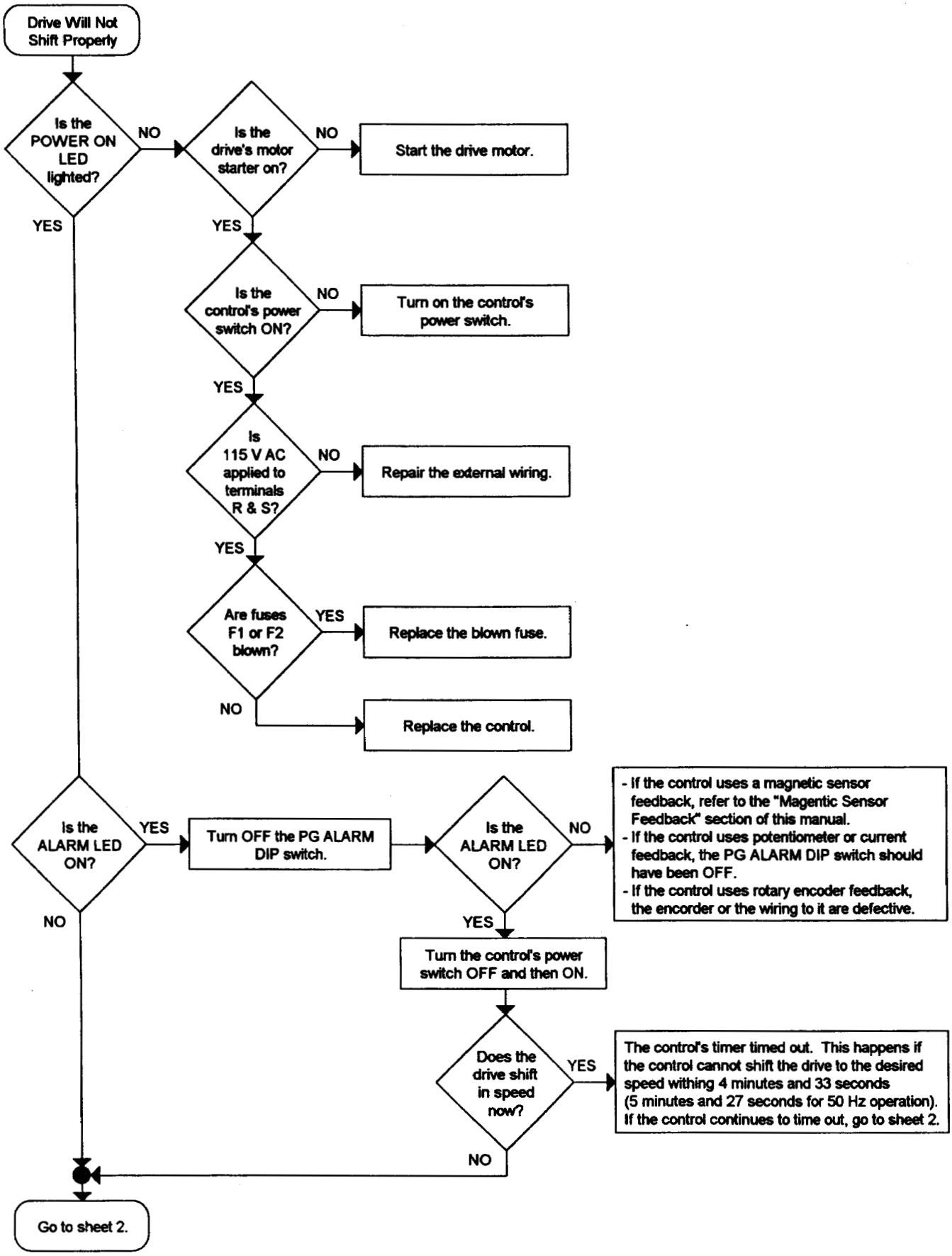

TROUBLESHOOTING FLOW CHART -- SHEET 2

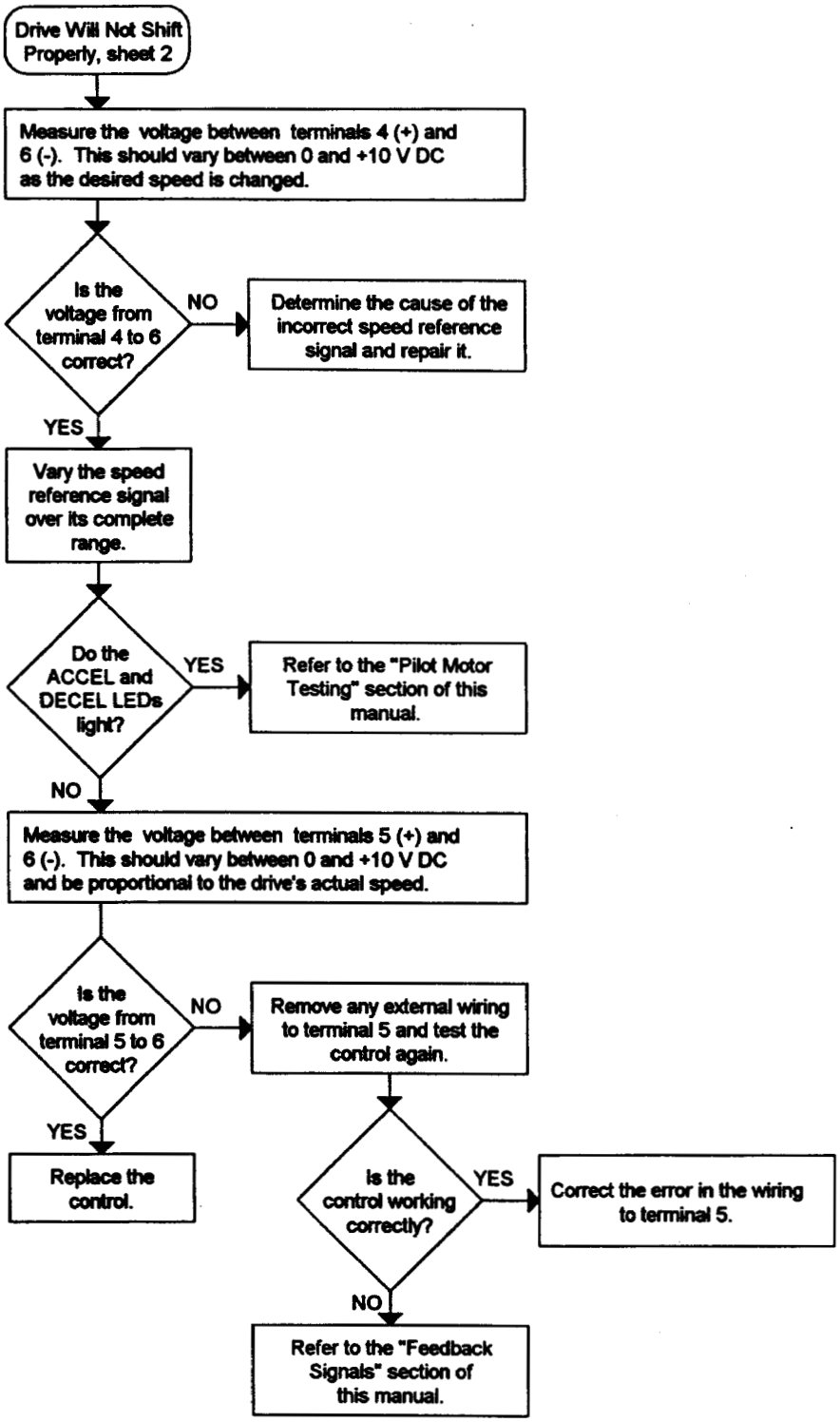

Feedback Signals

The Autorator is a closed-loop speed control. This means that it continuously compares the desired operating condition with the actual operating condition. If there is a significant difference between these, the control shifts the drive to correct the error.

A variety of feedback signals can be used. These include magnetic sensor, potentiometer, rotary encoder, tach generator and current feedback. The desired feedback signal must be specified when the control is ordered.

In all cases, the feedback signal is connected to terminals G1 and G2.

Magnetic Sensor Feedback
Models L_B-3A-2-__-_

The most common feedback signal is magnetic sensor feedback. The RXC Adjustable Speed Drive has a 60-tooth sensing gear mounted to its adjustable speed shaft, before any output speed reducer. The end of the magnetic sensor is mounted near this gear. The magnetic sensor is wired to terminals G1 and G2. As the gear turns, the sensor generates an AC output whose frequency in Hz is equal to the speed of the RXC's adjustable speed shaft in rpm. If an output speed reducer is used in conjunction with the RXC, the output speed of the complete drive package will be reduced by the ratio of the speed reducer.

Speed controls using magnetic sensor feedback provide a speed accuracy of ±5 rpm at the RXC's adjustable speed shaft, before any output speed reduction. The minimum operating speed of these control systems is 10 rpm, before any output speed reduction.

To test the magnetic sensor feedback system, it is best to connect a frequency counter to terminals G1 and G2 and measure the frequency produced. If a frequency counter is not available, the sensor can also be tested by connecting an ***AC*** volt meter to terminals G1 and G2. At maximum speed, a voltage from 7 to 15 V***AC*** rms, or more, should be measured. At low speed (10 rpm at the RXC's adjustable speed shaft) this voltage should be *greater than* 0.05 V***AC*** rms. While the generated voltage varies with the drive's speed, it is the *frequency* and not the voltage of this signal that is important. This voltage measurement simply confirms that an output is being generated by the magnetic sensor. The exact values of the voltages are not critical.

If there is no output signal from the magnetic sensor, first check for shorted wiring. Also be sure that nothing else is wired to terminal G1 and G2. If a digital tachometer is to be used in conjunction with the control, it must be wired to terminals 7 and 8. If the signal from the magnetic sensor is weak at low speeds, request a copy of Technical Report number 051790, "Installing a Magnetic Sensor in the RXC Adjustable Speed Drive" from Shimpo Drives.

Potentiometer Feedback
Models L_B-3C-2-__-_

Potentiometer feedback controls are used to set the position of the control ring of the RXC drive. They do not directly control the speed of the drive. A potentiometer on the control cover feeds control ring position information back to the Autorator control.

As the output load on an RXC drive increases, the drive automatically increases its reduction ratio. This provides additional torque multiplication while it reduces the output speed. The speed of the drive's output shaft (before any output speed reduction) drops about 100 rpm as the output load increases from zero to full. The potentiometer feedback control does not compensate for this speed drop.

Potentiometer feedback controls are commonly used in load sharing applications where more than one RXC drive is used to drive a load.

The feedback potentiometer is wired between terminals G1, G2 and 1. The wiper is connected to terminal G1. Terminal G2 is connected to circuit common. The voltage between terminal G1 and G2 varies between 0 and about +3 V DC as the drive is shifted from 0 rpm to full speed. If the feedback voltage does not change, check the wiring to the feedback potentiometer and be sure that the potentiometer's shaft turns as the drive is shifted.

When potentiometer feedback is used, there is no frequency output signal at terminal 7.

Rotary Encoder Feedback
Models L_B-3D-2-__-_

When a rotary encoder is used as the speed feedback signal, the operating characteristics are much the same as they are for the magnetic sensor feedback control.

The rotary encoder is wired between terminals G1 (+) and G2 (circuit common). If the rotary encoder has an open collector output, a positive power supply voltage in the range of 4.75 to 13 V DC at 40 mA must be provided. This must be provided by an external power supply. The low signal must be less than +0.8 V DC and the high signal must be between +2 and +13 V DC. The duty cycle must be between 25% and 75%. The frequency throughout the speed range must be between 8.3 Hz and 3 kHz.

Tach Generator Feedback
Models L_B-3B-2-__-_

This type of control uses a feedback signal from 0 to 50 V *AC* that is proportional to the drive's output speed. The operating characteristics are much the same as they are for the magnetic sensor feedback control.

The tach generator is wired between terminals G1 and G2 (circuit common).

When tach generator feedback is used, there is no frequency output signal at terminal 7.

Current Feedback
Models L_B-3H-2-__-_

This type of control uses a 4 to 20 mA DC feedback signal. The operating characteristics are much the same as they are for the magnetic sensor feedback control.

The current signal is wired between terminals G1 (+) and G2 (circuit common). The input impedance of the circuit is 250 Ω

When current feedback is used, there is no frequency output signal at terminal 7.

Other Operational Problems

Clicking sound from the pilot motor assembly. The pilot motor assembly includes a ball detent clutch to protect the pilot motor. If an excessive amount of torque is required to turn the drive's shifting mechanism, the ball detent clutch will slip, making a clicking sound. This will keep the pilot motor from stalling. A number of problems could cause this:

1. **Attempting to shift the drive with the main drive motor stopped.** The RXC drive is designed to be shifted only when its main drive motor is turning. The Autorator control should be interlocked with the motor starter circuit to ensure that the control is only powered when the main drive motor is turning.
2. **Improper wiring to the pilot motor.** Mixing the wires to the pilot motor can make it shift the drive in the wrong direction. See the "Pilot Motor Testing" section of this manual for more information.
3. **Incorrect feedback signal.** A loss of the feedback signal from the drive can make the control attempt to shift the drive beyond its speed range. See the "Feedback Signals" section of this manual for more information.
4. **Improper speed reference signal.** Incorrect speed reference signal range or polarity can make the control attempt to shift the drive beyond its speed range. The voltage between terminals 4 (+) and 6 (-) should be between 0 and 10 V DC.
5. **Improper setting of the FEEDBACK potentiometer or the control's DIP switches.** The FEEDBACK potentiometer and the control's DIP switches are set to match the maximum speed of the control to the capabilities of the drive. If these are adjusted incorrectly the control may attempt to shift the drive beyond its available speed range.
6. **Operating a control set up for 60 Hz from 50 Hz power.** If the drive motor is connected to 50 Hz power, the maximum speed of the drive is reduced to 5/6 of its value when 60 Hz power is used. On magnetic sensor and rotary encoder feedback controls this can be corrected by turning OFF the 50/60•POT•I DIP switch.

7. **Drive motor overload.** The speed of the RXC's drive motor will decrease as the load on it increases. If there is an extreme overload, the drive motor may not be able to provide a high enough speed for the RXC to produce its maximum output speed. The current to the drive motor can be measured to see if an overload is present.
8. **Improper setting of the RXC's mechanical speed stops.** The mechanical speed stops in the RXC drive are factory set and should generally not require readjustment. To check the position of the RXC drive's mechanical speed stops, turn the Autorator control turned OFF. Use the stub shaft on the RXC's control cover to shift the RXC manually over its entire speed range. *Contact Shimpo Drives before attempting to change the position of the drive's mechanical speed stops.*
9. **Damage to the RXC drive.** If the RXC drive is damaged, it may be hard to shift. Turn off the Autorator control and start the RXC's drive motor. Attempt to shift the RXC drive manually using the stub shaft on the control cover. Contact Shimpo Drives if the RXC is hard to shift manually with the drive motor running.

Erratic speed control.

Under normal conditions the Autorator control should quickly shift the RXC drive to the desired speed and the pilot motor should stop shifting. If the pilot motor continues to shift the RXC drive back and forth, the control's timer may eventually time out, shutting down the control. There are a number of possible causes for such erratic operation:

1. **Poor electrical connections.** Loose or dirty electrical connections may cause the speed reference signal or the feedback signal to fluctuate. Over time, vibrations caused by the driven equipment and dirt from the environment may degrade the electrical contacts. All electrical connections should be checked periodically.
2. **Electrical noise.** Electrical noise from other equipment can be picked up by wiring to the Autorator control. Be sure that shielded cable is used wherever specified. *Only one end* of the shielded should be connected. The other end must be insulated to avoid any electrical contact. Wires which carry low-voltage signals should be routed as far from high-power wiring as possible.
3. **Unstable speed reference signal.** If the Autorator control is connected to an external speed reference signal, the controller that is producing this signal may be unstable or have excessive electrical noise or ripple. If this is suspected, the speed reference signal should be examined using an oscilloscope.
4. **Continuous torque load variation.** The reduction ratio of the RXC drive changes in response to changes in the required output torque. Autorator controls which use a speed feedback signal respond to these changes by shifting the RXC in order to maintain a uniform output speed. If the load changes are frequent, the Autorator will continually drive the pilot motor to compensate for them. A flywheel can be added to the driven machine to reduce these torque variations. If this cannot be done, it may be necessary to increase the dead band of the Autorator control. Contact Shimpo Drives for assistance.

   Potentiometer feedback Autorator controls do not compensate for the drive speed variations that result from load changes. The pilot motor for such control systems should not move unless the speed reference signal is changed. However, load changes will cause the drive's output speed to change. This is normal.

ADJUSTMENT PROCEDURE FOR THE OPTIONAL 4 - 20 MA SIGNAL FOLLOWER

The connections to the optional 4 - 20 mA signal follower are on optional connector CN3. Pin 2 is connected to the positive side of the 4 - 20 mA signal. Pin 3 (circuit common) is connected to the negative side. The input impedance of this circuit is 250 Ω.

This circuit has been factory adjusted to provide a +10 V DC output at pin 1 when the input signal is 20 mA and a 0.125 V DC output when the input signal is 4 mA. It should normally require no further adjustment.

The following instructions are for use in readjusting the maximum or minimum speed of the drive when a 4 to 20 mA signal is used. Before this adjustment is made, the drive system should be tested using a manual speed potentiometer to ensure that the drive and the rest of the control are working properly. A DC volt meter capable or reading from 0.00 to 10.0 V DC is required.

1. Be sure that power is disconnected from the Autorator control.
2. Connect a 4 to 20 mA signal source to the Autorator control.
2. Turn the (BIAS) potentiometer fully counterclockwise.
3. Turn the (GAIN) potentiometer fully clockwise.
4. Connect the positive lead of the volt meter to V. OUT (CN3-1).
5. Connect the negative lead of the volt meter to circuit common, COM. This can be done at CN3-3, CN3-4, terminal 6 or terminal 8.
6. Apply power to the Autorator control.
7. Adjust the 4 - 20 mA signal source for its minimum signal, 4 mA.
8. Adjust the MAX (ZERO) potentiometer for a reading of 0.00 V DC on the volt meter.
9. Adjust the (BIAS) potentiometer for either the desired minimum speed or a reading of 0.125 V DC on the volt meter.
10. Adjust the 4 - 20 mA signal source for its maximum signal, 20 mA.
11. Adjust the (GAIN) potentiometer for either the desired maximum speed or a reading of 10.0 V DC on the volt meter.
12. Adjust the 4 - 20 mA signal source for its minimum signal, 4 mA.
13. Repeat steps 9 through 12 to ensure that the proper adjustments have been made.
14. Disconnect power from the Autorator control.
15. Remove the test equipment from the Autorator control.

This completes the adjustment procedure.

The Complete Line of SHIMPO Drives Products

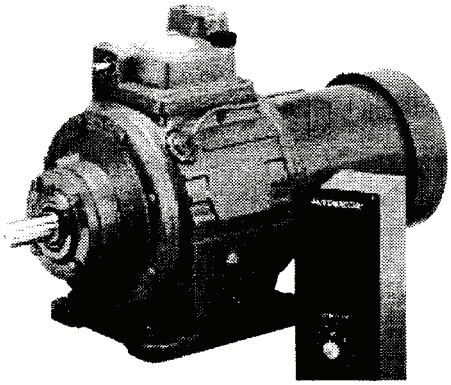

Adjustable Speed Drive

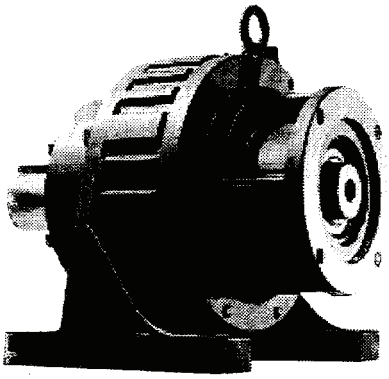

Speed Reducer

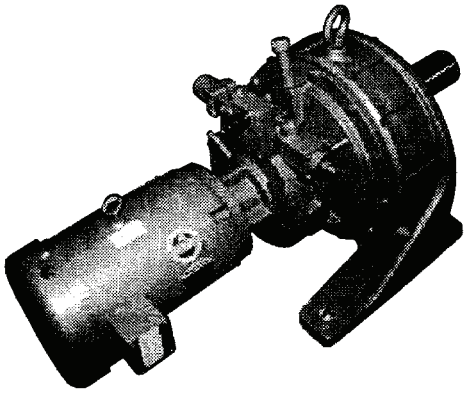

Torque Limiter Reducer

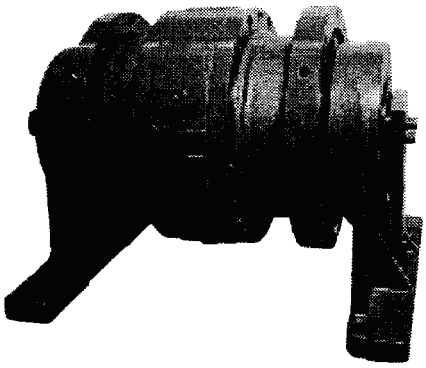

Floor Conveyor Reducer

NIDEC DRIVE TECHNOLOGY CORPORATION
175 Wall Street, Glendale Heights, IL 60139
Phone: (800) 842-1479 • info@nidec-dtc.com